Power Team®

PROFESSIONAL GRADE HYDRAULIC TOOLS & EQUIPMENT

- TABLE OF CONTENTS -



CYLINDERS 5-42 View





PUMPS 43-110 View





HYDRAULIC ACCESSORIES 111-144 View





SHOP EQUIPMENT 145-162 View





JACKS 163-184 View





HYDRAULIC & MECHANICAL TOOLS 185-222 View





PULLERS 223-264 View



RESOURCES 265-281 View





© 2021 Hydraulic Technologies and SPX FLOW Inc. All rights reserved. Every effort has been made to assure the accuracy of product descriptions in this catalog at the time of printing. SPX FLOW reserves the right to modify or discontinue products without prior notice, alter or amend any published specification without notice. SPX FLOW trade-names, trademarks, or any part of the document or any of its contents may not be copied, reproduced, transmitted, modified or used, in whole or in part, without the express prior written consent of SPX FLOW Inc or SPX Hydraulic Technologies. "Power Team", "Vanguard Jr.", "Quarter Horse", "Flame-out", "Posi-Check", "Roll-Bed", "Power-Twin" are registered trademarks of SPX FLOW Inc and SPX Hydraulic Technologies.

BB1600....214
BC212 - BC212EUR....74
BP12INT....74
C51C-C10010C....9, 11-12, 279
C55CBT - C2514CBT....13, 279
CB30, CB50, CB100....20
CBS55-CBS200....175
CC5-CC25....213
DFTAS000001, DFTAS000002....188, 189, 191
DG100, DG100B....140
FC2200 - FC4400....161
FK59....49
FK159B....51
FLS15, FLS15-ST....209
FCV....203
HFS3A - HFS6A....211
HB443, HB444....105
HNS150 - HNS225....208
HP35-HP35SP....215-216
HS2000 - HS3000....212
HST11, HST11S....247-248
HT75 - HT200....217
HTS50....222
IM10E, IM10H, IM10L....180
IJ13T - IJ7520T....177-178
IPS10B, IPS10HB....238
IPS10M, IPS17M....241
IPS17, IPS17B, IPS17H....253
IPS30H....254
IPS3017, IPS3017B....255
IPS50H....254
IPS5017, IPS5017B....256
IPS5317....257
J24T, J55T, J106T....171
J58T, J109T, J259T....172
JAM10033 - JAM15033 ,JAR10033, JEM5526 - JEM15026....176
JM25 - JM420....176
K82, K83....248
LR2000 - LR6000....161
MB5 - MB16....242
MCS-PE554-8 - MCS-PQ1204....97-98
P12, P19, P19L, P23, P55....49
P59L, P59L-1500....50
P157 - P460D....51
PA172 - PA174....63-64
PA6 - PA6M-2....53-54
PA6D - PA6DM-2....55-56
PA7....239
PA9, PA9H....57-58
PA50, PA50D, PA50R....61-62
PA55....109
PA60, PA64....59-60
PA462 - PA554....65-66
PA90....109
PB102-1 - PB104-0....71-72
PB1230D-PB51156D....242
PC200, PC200RC....126
PD313 - PD812....216
PE-NUT....99
PE102 - PE104....73-74
PE120....109
PE120M....107-108
PE172 - PE174M....75-76
PE182 - PE184C....77-78
PE213 - PE214S....79-80
PE302 - PE304R-2....83-84
PE30TWP....205
PE462 - PE464S....85-86
PE55....109
PE550 - PE554W....87-88
PE552S....87-88, 260
PE55TWP-BS, PE55TWP-4-BS....206
PE604T - PE604PT....89-90
PE4004, PE4004S....95-96
PE84....75-76
PED253 - PED254S....81-82
PG120HM....103
PG1203-CP....100
PG1200M-4 - PG1204S....103-104
PG303 - PG554....101-102
PG4204, PG404S....103-104
PG55....109
PH1002 - PH1002J....260
PH103C-PH103CR....250
PH53C, PH53CR....249
PH63C, PH83C, PH113C....247
PH172, PH173, PH173R....250
PH303, PH303R....250
PH303C....247
PH503....250
PH553C - PH553CL13....259-260
PH82K....247, 271
PHP8H - PHP8R-1....258
PMA, PUA....67-70
PMA55 - PMA355S, PME55 - PME355S....176
PPH17 - PPH50R....251-252
PQ603 - PQ604S....91-92
PQ1203 - PQ1204S....93-94
PR102 - PR104....73-74
PR2100J-PR3100S....261-262
PT102 - PT116, PT202 - PT216....243-244, 246
PT11054, PT11054L, PT11354L, PT11654L....244
PTPHB106-PTPHB116, PTPHB206-PTPHB216....244
PTPHC106-PTPHC116, PTPHC206-PTPHC216, PTPHD106-PTPHD116, PTPHD206-PTPHD216....245
PTPHE3....162
PTPH100T-PTPH200T....246
PTPHV859....162
PTP4-PTP16....246
PTPT-2550, PTPT3050....245
R552C - R56510C....35, 279
R1002D - R56510D....36, 279
R552L - R56510L....40, 279
RA202 - RA1006....17, 279
RA556L, RA1006L....39, 279
RB8013S - RB20013S....158
RC12V....74
RC2GAL, RC5....126
RD106 - RD50013....33-34, 279
RDG552 - RDG60014....29-32, 279
RGG552 - RGG60014....25-28, 279
RGP Series....41
RH102-RH2008....21-22, 279
RH306D....22, 279
RHA20-RHA100....24
RHA306....21
RHA604D....22, 279
RH121T....9, 21, 280
RJ Series....173-174
RLS50 - RLS1500S....18, 279
RP20 - RP104....126
RP22, RP50, RP100, RP101....110
RP25, RP55....14, 279
RPS55 - RPS556A....52
RSS101 - RSS2503....19-20
RT172 - RT1004....23-24, 279
RV21278 - RV21278-90....130
RWP55-BS, RWP55-4-BS....207
SB15....210
SF50....153, 157
SF150....154, 155, 157
SJ2010 - SJ2010P
SJ3010 - SJ3010P....183-184
SK10T, SK10TE....181
SK25T, SK25TE....182
SP1010A....150
SPA10 - SPA200....160
SPA2514....152
SPA256....151
SPA556....153
SPE1010, SPE1010D....150
SPE2514 - SPE2514DS....152
SPE256....151
SPE556 - SPE5513DS....153
SPE10010 - SPE10013DS, SPE10010R....154
SPE15013DS - SPE20013DS....156
SPH1010, SPM1010....150
SPM2514....152
SPM256....151
SPM256C....149
SPM2514....152
SPM556, SPM5513....153
SPM10010....154
SPX256C....149
SS2....235
TBP1622....159
TPP1 - TPP200....159
TPS6....159
TWH15 - TWH50....195
TWHC Series....187-190
TWLC Series....195-199
TWSD Series....191-194
TWSL Series....201-202
ZCC, ZDD Series....37-38
ZCL Series....42
0100 - 0600....220
10012, 10020....263
1020 - 1027, 1035 - 1050....229-230
1057 - 1080....249
1023, 1027....237
1057 - 1060....249
1060....250
1062....252
1064, 1066....250
1070....252
1074....250
1076....252
1080....250
10461....110, 133
10494....92, 94, 110, 125
10854-10855....263
1100 - 1111....232, 252
1104 - 1113....252
1120....220
1121 - 1124....234
1122....237
1125....220
1126 - 1128, 1130....234
1131....220
1150 - 1154....233
1155 - 1158....236
1165, 1166....233
1170-1174....236
1172, 1174....235
1176-1177....237
1178....235
1180, 1182....237
1188....248
12001....263
1266....221
1320, 1329, 1340, 1345, 1349....220
13449....219
15235....179
15702....220
16339....125
16954....219
17627....133
1888 - 1893....159, 160
2008082-2008083, 2008410....210
2008508....246
2008632....181
2009583-2009594....235
2000350 - 2000351....137
201362 - 201412....12
201454, 201923....24, 160, 213
202178 - 202180....15
202777, 202778....109, 133
202817....222
203003, 203017....219
203154 - 203156....219
203225....110, 133
203264....218
204928....221
206753....219
206767....125
207395....159, 160
207762....125
208380 - 208382....16
208401, 208402....219
208406....17
209124....110
209199, 209200....221
209201....220
209593....109, 133
21242, 21247-21258....262
212377....263
21332....160
213895, 213896....126
215315....238
216209....133
21669 - 21873....23
22041 - 22044....219
22185....235
22274, 22275....23
23934....262
24016....16
24196, 24197....23
24813, 24814....24
24832 - 24833....233
24835 - 34836....235
25017....110, 133
250175....125
250341 - 250343....179
250353....179
250459....216
250682....179
251002....259, 260
251410 - 251411....138
251468....259
251646, 251647....242
251660....133
252000....216
252215....21
25228....213
252364 - 252365....138
252511, 252512....90, 125
252542 - 253391....184
253155-253395....262
25388 - 25750....15-16
25931....24
26068 - 26079....219
26666....219
27198....24
27241....235, 236
27287....219
27315....235, 238
27487-27555....263
27737....219
27793 - 27797....263
27876, 27877....110
28228-28230....24
28229....213
28612 - 28644....21-22
28984, 28985....219
29595....24
3-3944 - 3-3959....137
3000975, 3000989....72
300472 - 300699....125
302482, 302483....24
303785....24
30416-30417....262
304718....109, 133
30512, 30519-30522, 30585-30586....262
307159....179
308022....208
308435OR9....182, 253
308436OR9....255
308438OR9....254
308439OR9....256
308440OR9....257
308840....208
309652, 309653....109, 133
309874....213, 249
309875....249
31772, 31776....16
32054....235
32118....24
32325....180
32698 - 33439....24
34136....24
34251....22
34331....235
34510, 34511....160, 213
34698....235
34755, 34756....160
34758....24
34806 - 34808....160, 213
350090....179
350094-350100....15-16
350144, 350145....15, 34, 213
350184....15
350199....110
350207-350209....179
350320-350332....19
350376....15
350431....110, 125
350549....211, 260
350550....211
350593-350594....259
350637....52, 259, 260
350722....52, 180
350723-350724....15
350822, 350823....211
350895-350898....16
351075, 351106....14
351324, 351325, 351334....34
351574 - 351576....15-16
351830....262
351985....208
36161....12
36469....160
36578....235, 238
37045....138, 218
37368....159-160
38597....159, 160, 213
38855, 38904....21-22
38908, 38909....16
38953....159, 160, 213
38954....160
40063OR9....108, 110
40137OR9....110
41331....235
420059 - 420064....15-16
420496BK2, 420498BK2....17
420655OR9....11
420778....140
420845-420846....262
420866-420871....35, 40
421056, 421057....14
421312OR9....22
43562, 43563....159, 160
44148, 44195....235, 237
44457, 44458....160
45589....20
46070....159, 160
47997....249
518....239
522....237, 239
58943 - 58945....175
60846....149
61165....110
61799OR9....110
679, 680....234
6981....235
7053K....220
7103....222
7123K, 7125K....220
7136....236
714....220
7162 - 7168....221
7180....263
7208....237
7300, 7301....220
7307 - 7309....221
7312....222
7313....220
7350....263
7392....239
7393....237, 239
7395....222
7400, 7401....221
7402....222
7406K....220
7420, 7421....221
8000 - 8029....240
8035 - 8044....239
8056 - 8056....240
8057-8073, 8075-8076....240
8110-9117, 8120-8126....239
885....221
9002A-9008A....169
9006X, 9011X, 9013X....170
9012A, 9020A....168
9015B, 9022B, 9033B....169
9040 - 9089....139
9049....110
9050A....169
9042DG, 9042DG1500....141-142
9105A....167
9110B, 9112A, 9120A....169
9130A....168
9190....143
9205A - 9220A....167
927....231-232, 237
938, 939....231-232
9500, 9501....109, 120
9502....109, 115, 119
9504....109, 115, 118
9506, 9507....109, 120
9508, 9509....128
9510....134
9511....109, 120
9512, 9513....109, 123
9514....128
9515....134
9516....123
9517....118
9519....123
9520....109, 119
9521....134
9522, 9523....123
9524....127
9525, 9526....128
9531....134
9552....122
9553....123
9554....127
9555, 9556, 9559....128
9560....71, 74
9561-9563....71, 74
9569, 9570, 9572....122
9575....131
9579....122
9580-9581....131
9582, 9584....109, 115, 117
9589, 9590....123
9592....122
9593....127
9594....109, 122
9595....127
9596, 9597....129
9599, 9605....109, 121
9608....129
9609....109, 121
9610....109, 115, 117
9610A....115, 117
9615....109, 123
9616....132
9617....144
9620-9621....134
9623....131
9625....134
9626, 9627....109, 144
9628....109, 115, 124
9631....130
9632....109, 115, 124
9633....130
9634, 9635....144
9636-9640....132
9637-9640, 9645, 9646....110
9641....110, 134
9642....144
9643....110, 134
9644....144
9645-9647....132
9648....144
9670-9690....143
9691....144
9692 - 9705....143
9720, 9721....129
9733-9736, 9754-9762, 9776-9779....135
9750-9751, 9764-9772, 9780-9783....136
9773-9775....137
9785-9788....218
9792 - 9800....138

A

Adapters
- Fittings, Hydraulic Testers....219
- Step Plate....240
- Threaded (Puller)....239-240

Air Filter/Regulator/Lubricator....134
Air/Hydraulic Pumps....43-70
Aluminum Cylinders....17, 21-22
"Assemble to Order" Pumps....107-110
Attachments, Puller....233-234
Axle Journal Roller Bearing
- Service Equipment....261-262

B

Battery Pumps....71-72
Bead Breaker....214
Bearing Cup Installer....263
Bearing Cup Remover....236
Bearing Pulling Attachments....233-234
Bench Presses....150
Bench Vise....162
Bi-Directional™ Pullers....237-238
Blanket, Protective....242
Blind Hole Puller Set....235
Bottle Jacks....168-170
Bushing and Bearing Drivers....263

C

C-Clamps....213
C-Frame Press....149
Carts
- Hydraulic Lift Cart....245
- Storage Transport Cart....245
- Universal Pump Cart....126

Casters....92, 94, 110, 125, 242
Center-Hole
- Accessories....24
- Cylinders....21-24
- Twin Cylinders....33-34

Chain Wrenches....221
Chaser, Thread....222
Check Valves....131
Construction Cylinders....25-32, 37-38, 42
Counter-Balance Valve....129
Couplers,
- Hydraulic....138, 143
- Testers....219

Crane Accessories....162
Cranes, Mobile....161
Cribbing Block Sets....20, 174-175
Cylinder-Pump-Hose Sets, Hydraulic....52
Cylinders, Hydraulic....11-42

D

Digital Pressure Gauge....140-142
Driver Tools, "Custom-Made"....263
Double-Acting Cylinders
....20, 22-24, 29-34, 36, 38

E

Electric/Hydraulic Pumps....73-99
"Enforcer 55" Hydraulic Puller....259
"Enforcer 100" Hydraulic Puller....260

F

Female Straight Flange Adapter....219
Female Threaded Adapters, Pullers....239
Filter/Regulator/Lubricator, Air....134
Fixtures, Straightening....153-158
Flanged Head Adapter Unions....219
Flange Type Puller....239
Floor Cranes, Mobile....161
Flow Characteristics, Valves....113-114
Flow Control Valve....203
Fluid Level & Temperature Gauge....125
Flush Face Couplers....138
FLS Flange Spreaders....209-210
Foot Control Guard....125
Foot Pump Conversion Kit....49, 51
Forcing Presses....145-158
Four-in-One Puller Set....239

G

Gas Pumps....100-104
Gauges
- Analog....139
- Digital....140-142

General Purpose Cylinders
- C Series....11-12
- Double-Acting....29-32
- Single-Acting....25-28

Gear and Pulley Pullers....239
Gland Nut Wrench, Adjustable....221

H

H-Frame Press....150-158
Hand Pumps....49-52
Hand Tools....221
Head Inserts, Cylinder....21-23
High Cycle Torque Wrench....187-190
High Pressure
- Air Operated Pump....67-70

Horseshoe Lock Ring Plier....220
Hoses, Air (Inflatable Jacks)....179
Hoses, Hydraulic
- Non-Conductive Hoses....137
- Polyurethane....136
- Torque Wrench Hoses....137
- Wire-Braid Rubber Hoses....135

Hydraulic Accessories....111-144
Hydraulic Battery Pump....71-72
Hydraulic Bench Vise....162
Hydraulic Couplers....138, 143
Hydraulic Cranes....161
Hydraulic Cylinders....11-42
Hydraulic Flange Spreader....209-210
Hydraulic Fittings....143, 219
Hydraulic Gauges....139-142
Hydraulic Hose....135-137
Hydraulic Jacks....163-184
Hydraulic Manual Pumps....49-52
Hydraulic Nut Splitter....208
Hydraulic Oil....132
Hydraulic Presses, Shop....145-162
Hydraulic Puller Sets....243-246
Hydraulic Pumps....43-110
Hydraulic Punches....215-216
Hydraulic Spreaders....209-212
Hydraulic Testers & Accessories....217-218
Hydraulic Tools....185-222
Hydraulic Valves
- Pump-Mounted....115, 117-124
- In-Line....116, 129-131
- Remote-Mounted....116, 127-128

I

Industrial Maintenance Sets....180
Industrial Maintenance
- Puller Sets....241, 253-257

In-Line Valves....129-131
Inflatable Jacks....177-178
Inflatable Jacks, Accessories....179
Intensifier, Hydraulic....105
Internal Pulling Attachments....233

J

Jack Modules....176
Jacks, Bottle....168-170
Jacks, High-Tonnage....175-176
Jacks, Hydraulic....163-182
Jacks, Hydraulic Toe....171-172
Jacks, Inflatable....177-179
Jacks, Stressing....183-184
Jimmy Bars....221

L

Lifting Handles....17, 21-22
Lightweight Hand-pump....49-52
Load-Lowering Valve....129
Load Rotors® / Load-Positioning Slings....161
Low Profile Cylinders....18
Low Clearance Torque Wrench....195-199

M

Magnetic Pick-Up Tool....222
Magnetic Strip....125
Maintenance Sets....180
Male-Female Threaded Adapters, Pullers....240
Manifolds, Remote & Pump-Mounted....144
Manual Pumps....49-52
Manual Puller Sets....241
Mechanical Posi-Lock® Pullers....243-244
Mechanical Tools....185-222
Metering Valve....130
Metric Adapters....239
Metric Conversion Charts....275-276
Mini Jack....167
Motion Control System....97-98
Motor Controls....133
Mounting Accessories, Cylinder....15-16

N

Nut Splitters....208
Nut Wrench....221

O

Oil Cooler Kits....125
Oil, Hydraulic....132
O-Ring Seal Pick....222

P

Pancake Cylinders....41
Pegboard Display....246
Pilot-Operated
- Air Control Valves....134
- Auto....117
- Check Valve....131
- Solenoid....123

Pipe Sealant, Heavy-Duty....222
Pipe Flange Spreaders....211
Pliers, Retaining Ring....220
Positioning Slings....162
Post-Tensioning Valves....124
Press Accessories....159-160
Presses, Hydraulic Roll-Bed®....157-158
Presses, Hydraulic Shop....145-162
Pressure Switches....134
Pressure Reducing Valve....179
Pressure Regulator Valve, "In-Line"....130
Pry Bars....221
Puller Adapters....239-240
Puller Attachments....233-234
Puller, Blind Hole....235
Puller Cart....245
Pullers....223-264
Pullers, Bearing....229-263
Pullers, Bearing Cup Remover....236
Pullers, Gear....229-263
Pullers, Hydraulic Bundles....243-246
Pullers, Internal....233-238
Pullers, Jaw-Type....230, 241-242, 253-257
Pullers, Posi-Lock®....243-246
Pullers, Pulley....234
Pullers, Sets....237-238, 241
Pullers, Slide Hammer....235-236
Pullers, Universal
- "Enforcer 55" Hydraulic....259
- "Enforcer 100" Hydraulic....260

Pulley Pullers....234
Pull Cylinder....14
Pump Cart....126
Pump Accessories, Hydraulic....133-134
Pump-Cylinder-Hose Sets, Hydraulic....52
Pump-Mounted Valves....134
Pump Reservoirs....110, 126
Pumps, Hydraulic....43-110
Pumps, Hydraulic,
- Accessories....133
- Air....53-70
- Battery....71-72
- Electric....73-99
- Gas....100-104
- Hand....49-52
- Torque Wrench....203-207

Punches, Hydraulic....215-216
Push-Pullers,
- Hydraulic....258
- Mechanical....252

Q

Quality Standards, Industry....267
Quarter Horse Pumps....73-74
Quick-Connect Couplers....138
"Quiet" Pumps....91-94

R

Rail Jacks Accessories....174-176
Railroad Axle Journal Bearing
- Service Equipment....261-262

Ratcheting Chain Wrenches....221
Relief Valve, "In-Line"....130
Remote Controls....133
Remote-Mounted Valves....127-128
Reservoir....110, 126
Reservoir Breather Kit....125
Resources....265-280
Retaining Ring Pliers....220
Rethreading Tools....222
Roll-Bed® Presses....157-158
Roll Cage Pump....126
Roller Bearing Puller / Installer....261-262
Rubber Tire Removing/Installing Set....159

S

Safety Insights....269-270
Seal Kits, Cylinder....279-280
Security Chests....242
Sequence Valve....129
Service Tools....222
Shaft Protector Set....240
Shop Press Accessories....159-160
Shop Presses....145-158
Shorty Cylinders....19-20
Shut-off Valves....131
Single-Acting Cylinders
....11-14, 17-21, 23-28, 35, 37, 39-42
Slide Hammer Pullers....235-236
SlimLine Torque Wrench....201-202
Solenoid-Operated Valves....122-123
Spanner Wrenches....221
Split Flange Kit....219
Spreaders, Hydraulic....209-212
Square Drive Torque Wrench....191-194
Standards, Quality....267
Startup Kits (SK)....181-182
Step Plate Adapter Sets....240
Storage Boxes
- Maintenance Sets....180
- Metal....182, 242
- Puller Sets....237-238
- Pumps & Cylinders....52
- Wooden....182, 253-257

Storage Transport Cart....245
Straightening Fixtures....153-155, 157
Straightening Tool....248
Stressing Jacks and Pumps....183-184
"Strong Box" Puller Sets....238
Subplates, Pump....134
Switches, Hand and Foot....110, 133

T

Testers
- Accessories....219
- Hydraulic System....218

Temperature & Fluid Level Gauge....125
Thread Chaser....222
Threaded Adapters, Puller....239-240
Tire Pressing Set....159
Tire Removing Tool....214
Toe Jacks, Hydraulic....171-172
Tools, Hydraulic....185-222
Torque Wrench
- Extended Reaction Arm....189, 193
- Handles....189, 193
- Hoses....137
- Links....197-198
- Long Reaction Arm....190, 194
- Pumps....203-207
- Reaction Bar....199
- Reaction Pad....190, 194, 199
- Reducers....196
- Sockets....192

Torque Wrenches
- High-Cycle....187-190
- Low Clearance....195-199
- SlimLine....201-202
- Square Drive....191-194

V

V-Belt Pulley Pulling Attachments....234
Valves, Hydraulic
- Pump-Mounted....109, 117-124
- Remote-Mounted....127-128
- In-Line....129-131

Viton™ Seal Kits....125, 279-280

W

Warranty....268
Wheels (Casters)....92, 94, 110, 125, 242
Wrenches, Industrial....221
Wrenches, Ratcheting Chain....221
Wrenches, Spanner....221
Wrenches, Torque....187-202

CYLINDERS

FROM 2 TO 1650 TONS!

SUPERIOR FEATURES OF POWER TEAM HYDRAULIC CYLINDERS:

We build our own cylinders in our ISO 9001 registered manufacturing facilities. All Power Team cylinders are date coded and stamped with a maximum pressure rating and capacity. Each cylinder we make complies with the demanding ASME B30.1 standard and are assembled/tested by certified assemblers and pressure tested to 125% of capacity before leaving our factories. Some other key features included:

- Cylinder bores are roller burnished to harden and smooth the surface, improving seal life by 30%.
- Base mounting holes withstand full cylinder capacity.
- Typical cylinder burst pressure range is from 25,000 to 35,000 psi, well-beyond extreme usage.
- Cylinders with gland nuts may be "dead-ended" at 10,000 psi.
- Eddy current and mag-particle inspections detect flaws in the steel.
- Material is removed from surface to ensure that any flaws are eliminated.



POWERTHON LIFETIME WARRANTY



Page Description	Cylinder Movement	Type of Return	Tonnage Range	Page(s)
Introduction	-	-	-	5-10
C	Single-Acting	Spring	5-100	11-12
CBT	Single-Acting	Spring	5-25	13
RP	Single-Acting	Spring	2-5	14
C Accessories	-	-	-	5-16
RA	Single-Acting	Spring	20-100	17
RLS	Single-Acting	Spring	5-150	18
RSS	Single-Acting Double-Acting	Spring	10-250	19-20
RH	Single-Acting Double-Acting	Spring Hydraulic	100-100 30-200	21-22
RT	Single-Acting	Spring	17.5-100	23-24
RGG	Single-Acting	Load	55-600	25-28
RDG	Double-Acting	Hydraulic	55-600	29-32
RD	Double-Acting	Hydraulic	10-500	33-34
R	Single-Acting Double-Acting	Load Hydraulic	55-565 100-565	35-36
RGL	Single-Acting Double-Acting	Load Hydraulic	55-600	37-38
RA_L R_L	Single-Acting, Locking	Load	55-100 55-565	39-40
RGP Series	Single-Acting, Locking	Load	67-565	41
Z-Series	Various	Various	550-1650	42



SELECTING THE RIGHT CYLINDER:

Step 1: Select the hydraulic cylinder that best suits the application.

Step 2: Select a hydraulic pump with adequate oil output and reservoir capacity to power cylinder.

Step 3: Select pump and valve option that is best suited to the cylinder and application.

CYLINDER SIZING CONSIDERATIONS:

1. What push or pull tonnage is required per cylinder in your application? Power Team recommends using 80% of the rated capacity and stroke to maximize product performance and safety.
2. What is the push or pull stroke length required?
3. Does the cylinder need to push, pull or both? (Single-acting cylinders extend the piston under hydraulic pressure. Double-acting cylinders extend and retract the piston under pressure.)
4. Does the application require multiple cylinders?
5. Is the application stationary, or must the components be light in weight for easy portability?
6. Do you need to extend a rod or cable through the center of the cylinder for the application, as in a tensioning operation?
7. Does the application require that the cylinder fit within limited-clearance work areas?
8. Does the application require that the cylinder be "dead-ended" at the end of it's work stroke?
9. Will the cylinder need to withstand off-center loads? If yes, consider using swivel load caps.
10. Does the application require that the lifted load be supported for extended periods of time? Locking collars are ideal for such jobs, as are cribbing blocks.
11. Is corrosion resistance required? Our unique "Power-Tech" surface treatment is standard on many Power Team cylinders, and optional on many of our cylinders which feature steel construction.
12. Will the application involve high cycles (over 2,500 in the cylinder's lifetime)? Our "RD," "RH," "RP" and "C" series cylinders are ideal choices. Please refer to pages 12-13 for the capabilities of each cylinder.

WHAT TYPE OF CYLINDER DO YOU NEED?

1. To determine a cylinder's force capacity:	Force pounds	Cylinder Effective Area (sq. in.)	X	PSI from Pump
2. To determine oil capacity of a cylinder:	Oil Capacity (cu. in.)	Cylinder Effective Area (sq. in.)	X	Cylinder Stroke (in.)
3. To determine reservoir capacity needed for a multiple cylinder system:	Usable Oil	Oil Cap. of Cyl. (cu. in.)	X	Number of Cyl. in System

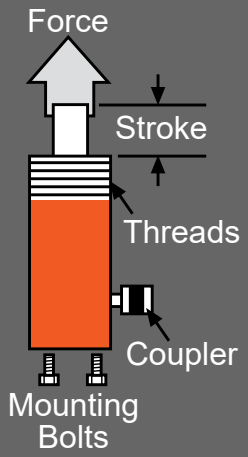

The following guidelines are for general lifting and construction applications. Hydraulic tools, pullers and presses may fall outside these recommendations. Always check to see that the pump's "usable reservoir capacity" exceeds the cylinder(s) oil capacity.

Generally Recommended
Marginal Check Requirements
Not Requirements for most applications

		Pressure Stage	CYLINDER CAPACITY (Tons) 5	10	15	20	25	30	55	75	100	150	200	300	400	500
Hand Pumps *	P12 ‡	Single	14	32	44	65	72	93								
	P55 ‡	Single	6	14	19	28	31	40	71							
	P19(L)	Low	4	8	10	15	17	21								
		High	13	30	42	59	68	86								
	P59F	Low	1.8	4.1	5.7	8	9	12	20	29						
		High	8	17	24	34	48	50	85	122						
	P59(L) ‡	Low	1.5	3.2	4.7	7	7.7	9.7	16.7	23.9						
	P157(D)‡	High	6	14	19	28	31	40	71	101						
	P159(D) ‡	Low	0.5	1	1.3	1.9	2.2	2.8	5	7	9	13	18			
	P300(D) ‡	High	7	15	21	30	34	43	77	110	143	200	250			
	P460(D)‡	Low	0.1	0.3	0.6	0.6	0.7	0.9	1.5	2.2	2.8	4.2	5.6	8.4	11.2	
		High	3.3	7.7	9	14	17.5	22	37	55	71	105	143	213	284	
Electric/ Hydraulic Pumps †	PB10 / PE10	Low	0.5	1.2	1.6	2.2	2.6	3.2	5.5							
		High	6	13.4	18.9	27	31	39	66.2							
	PE17 ‡	Low	0.2	0.5	0.7	0.9	1.1	1.4	2.3	3.3	4.3	6.5	8.7			
		High	3.5	7.9	10.9	16	18	23	39	56.3	73	109	146			
	PE18	Low	0.4	0.8	1.2	1.6	1.8	2.3	3.9	5.7	7.3	10.8	14.6	21.9	29.2	
		High	3.3	7.5	10.3	15	17	21	37	53	69	102	136	207	276	
	PE21 ‡	Low	0.2	0.5	0.7	1.0	1.1	1.4	2.5	3.6	4.6	6.8	9.2	13.8	18.4	
		High	2.8	6.4	9	13	15	19	32	45.5	59	88	118	177	236	
	PED25	Low	0.2	0.4	0.6	0.9	1.0	1.3	2.2	3.2	4.1	6.1	8.3	12.0	15.7	19.9
		High	2.4	5.4	7.5	10.6	12.4	15.6	26.5	38.2	49.5	73.3	99.1	144.3	188.5	238.6
	PE30 ‡	Low	0.2	0.45	0.6	0.9	1	1.3	2.2	3.2	4.1	6				
		High	2	4.5	6	9	10	13	22	32	41	60				
	PE46 ‡	Low	0.1	0.3	0.4	0.5	0.6	0.7	1.3	1.8	2.4	3.5	4.7	7.2	9.6	
		High	1.3	2.9	4.1	5.9	6.8	8.6	14	22	28	42	56	84	112	
	PE55 ‡	Low	0.1	0.2	0.3	0.4	0.4	0.6	0.9	1.4	1.8	2.6	3.5	5.4	7.2	
	PE60 ‡	High	1.4	2.4	3.4	4.8	5.6	7.1	12	17.8	23	34	45	69	92	
	PQ60	Low	0.1	0.2	0.3	0.4	0.4	0.5	0.9	1.3	1.7	2.5	3.4	5.1	6.8	8.5
		High	1	2.2	3.3	4.4	5.2	6.5	11	16.2	21	31	41	63	84	105
	PQ120	Low	0.1	0.2	0.3	0.4	0.4	0.5	0.9	1.3	1.7	2.5	3.4	5.1	6.8	8.5
		High	0.5	1.1	1.6	2.2	2.6	3.2	5.5	7.7	10	15	21	30	40	50
	PE400	Low	0.1	0.1	0.2	0.2	0.3	0.3	0.6	8	1	1.5	2.1	3	4	5
		High	0.1	0.3	0.4	0.6	0.7	0.9	1.6	2.2	2.9	4.4	5.9	8.7	11.6	14.5
Air/ Hydraulic Pumps †	PA6 ‡	Single	10	22.4	31	44.4	51.3	65.2								
	PA9 ‡	Single	10	22.4	31	44.4	51.3	65.2								
	PA17 ‡	Low	0.2	0.5	0.7	0.9	1.1	1.4	2.3	3.3	4.3	6.5	8.7			
		High	3.5	7.9	10.9	16	18	23	39	56	73	109	146			
	PA46 ‡	Low	0.1	0.3	0.4	0.5	0.6	0.7	1.3	2	2.4	3.5	4.7	7.2	9.6	
		High	1.3	2.9	4.1	5.9	6.8	8.6	14	22	28	56	42	84	112	
	PA55 ‡	Low	0.1	0.3	0.4	0.6	0.7	0.9	1.5	2.2	2.8	4.1	5.5	8.4	11.2	
		High	1.1	2.4	3.4	4.8	5.6	7.1	12	18	56	34	45	69	92	
Gas/ Hydraulic Pumps †	PG30	Low	0.3	0.7	1	1.3	1.6	2	3.3	4.8	6.2	9.3	12.4	18.1		
		High	2	4.5	6.3	8.9	10.3	13	22	31.8	41.3	61.4	83	121		
	PG55 ‡	Low	0.1	0.3	0.4	0.6	0.7	0.8	1.4	2	2.6	3.9	5.2	7.6	9.9	12.5
		High	1.1	2.5	3.5	4.9	5.6	7.1	12.1	17.3	22.5	33.5	45	66	86	109
	PG120 ‡	Low	0.1	0.3	0.4	0.6	0.7	0.8	1.4	2	2.6	3.9	5.2	7.6	9.9	12.5
		High	0.5	1.0	1.5	2.0	2.4	3.0	5.1	7.3	9.5	14.2	19.1	27.8	36.3	46.0
	PG400	Low	0.1	0.1	0.2	0.2	0.3	0.3	0.6	0.8	1.0	1.5	2.0	3.0	3.8	4.9
		High	0.2	0.3	0.5	0.7	0.8	1.0	1.7	2.4	3.1	4.6	6.2	9.0	11.8	15.0

s = Numbe
and Gasol

‡ Some Power Team pumps are available in special configurations not listed in this catalog. Power Team can "Assemble to order" pumps with special seals, voltages, valves, relief valve settings, etc. For your special requirements, please consult your local distributor or the Power Team factory.

	Stroke (in.)	Retracted Height (in.)	Cylinder Movement	Order No.	Page No.
2 Ton Pull	5.00	9.19	SA	RP25	14
5 Ton Pull	5.50	11.88	SA	RP55	14
5 Ton	0.56	1.6	SA	RLS50	18
	1.00	4.4	SA	C51C	12
	3.25	6.5	SA	C53C	12
	5.25	8.5	SA	C55C	12
	5.25	10.5	SA	C55CBT	13
	7.25	10.8	SA	C57C	12
	9.25	12.8	SA	C59C	12
10 Ton	0.44	1.8	SA	RLS100	18
	1.00	3.6	SA	C101C	12
	1.50	3.5	SA	RSS101	20
	2.13	4.8	SA	C102C	12
	2.50	5.3	SA	RH102	21
	4.13	6.8	SA	C104C	12
	6.13	9.8	SA	C106C	12
	6.13	11.5	SA	C106CBT	13
	6.25	11.7	DA	RD106	34
	8.00	11.3	SA	RH108	21
	8.13	11.8	SA	C108C	12
	10.00	15.7	DA	RD1010	34
	10.13	13.8	SA	C1010C	12
	10.13	15.5	SA	C1010CBT	13
	12.13	15.8	SA	C1012C	12
	14.13	17.8	SA	C1014C	12
12 Ton	0.31	2.2	SA	RH120	21
	1.63	4.8	SA	RH121	21
	1.63	4.8	SA	RH121T	21
	3.00	7.3	SA	RH123	21
15 Ton	1.00	4.9	SA	C151C	12
	2.13	5.9	SA	C152C	12
	4.13	7.9	SA	C154C	12
	6.13	10.7	SA	C156C	12
	8.13	12.7	SA	C158C	12
	10.13	14.7	SA	C1510C	12
	12.13	16.7	SA	C1512C	12
	14.13	18.7	SA	C1514C	12
	16.00	20.6	SA	C1516C	12
17.5 Ton	2.00	6.9	DA	RT172	24
20 Ton	0.44	2.0	SA	RLS200	18
	1.75	3.8	SA	RSS202	20
	2.00	6.1	SA	RH202	21
	2.13	6.4	SA	RA202	17
	3.00	6.1	SA	RH203	21
	4.13	8.4	SA	RA204	17
	6.00	12.1	SA	RH206	21
	6.13	10.4	SA	RA206	17
25 Ton	1.00	5.5	SA	C251C	12
	2.00	6.5	SA	C252C	12
	4.00	8.5	SA	C254C	12
	6.25	10.8	SA	C256C	12
	6.25	13.4	SA	C256CBT	13
	6.25	12.4	DA	RD256	34
	8.25	12.8	SA	C258C	12
	10.25	14.8	SA	C2510C	12
	12.25	16.8	SA	C2512C	12
	14.13	18.8	SA	C2514C	12
	14.13	20.4	DA	RD2514	34
	14.13	21.4	SA	C2514CBT	13
30 Ton	0.50	2.3	SA	RLS300	18
	2.13	7.4	SA	RA302	17
	2.44	4.6	SA	RSS302	20
	2.50	6.3	SA	RH302	21
	2.50	8.4	DA	RT302	24
	3.00	7.1	SA	RH303	22
	4.13	9.4	SA	RA304	17
	5.88	11.1	SA	RHA306	21
	6.00	9.8	SA	RH306	21
	6.00	11.1	DA	RH306D	22
	6.13	11.4	SA	RA306	17
	8.25	12.8	SA	C308C	12
	10.13	17.3	DA	RH3010	22
50 Ton	0.63	2.6	SA	RLS500S	18
	2.38	5.0	SA	RSS502	20
	3.00	7.1	SA	RH503	21
	3.00	10.6	DA	RT503	24
55 Ton	2.00	4.9	SA	R552C	35
	2.00	6.4	SA	R552L	40
	2.00	6.9	SA	C552C	12
	2.00	7.1	DA	RDG552	30
	2.00	7.1	SA	RGG552	26
	2.00	7.8	SA	RGL552	37
	2.13	6.8	SA	RA552	17
	4.00	9.1	DA	RDG554	30
	4.00	9.1	SA	RGG554	26
	4.00	9.8	SA	RGL554	37
	4.13	8.8	SA	RA554	17
	4.25	9.1	SA	C554C	12
	6.00	8.9	SA	R556C	35
	6.00	10.4	SA	R556L	40
	6.00	11.1	DA	RDG556	30
	6.00	11.1	SA	RGG556	26
	6.00	11.8	SA	RGL556	37
	6.13	10.8	SA	RA556	17
	6.13	12.5	SA	RA556L	39
	6.25	11.1	SA	C556C	12
	6.25	13.0	DA	RD556	34
	8.00	13.1	DA	RDG558	30
	8.00	13.1	SA	RGG558	26
	8.00	13.8	SA	RGL558	37
	10.00	13.0	SA	R5510C	35
	10.00	14.4	SA	R5510L	40
	10.00	15.1	SA	RA5510	17
	10.00	15.1	DA	RDG5510	30
	10.00	15.1	SA	RGG5510	26
	10.00	15.8	SA	RGL5510	37
	10.25	15.1	SA	C5510C	12
	12.00	17.1	DA	RDG5512	30
	12.00	17.1	SA	RGG5512	26
	12.00	17.8	SA	RGL5512	37
	13.00	18.1	DA	RDG5513	30
	13.00	18.1	SA	RGG5513	26
	13.13	19.8	DA	RD5513	34
	13.25	18.1	SA	C5513C	12
	14.00	19.1	DA	RDG5514	30
	14.00	19.1	SA	RGG5514	26
	18.13	25.9	DA	RD5518	34
60 Ton	3.00	9.25	SA	RH603	21
	4.00	9.50	DA	RHA604D	22
	5.00	9.50	DA	RH605	22
	6.00	12.50	SA	RH606	21
	10.13	18.06	DA	RH6010	22
67 Ton	1.75	4.8	SA	RGP672	41
75 Ton	0.63	3.1	SA	RLS750S	18
	2.00	7.4	DA	RDG752	30
	2.00	7.4	SA	RGG752	26
	2.00	8.2	SA	RGL752	37
	4.00	9.4	DA	RDG754	30
	4.00	9.4	SA	RGG754	26
	4.00	10.2	SA	RGL754	37
	6.00	11.4	DA	RDG756	30
	6.00	11.4	SA	RGG756	26
	6.00	12.2	SA	RGL756	37
	6.13	12.4	SA	C756C	12
	8.00	13.4	DA	RDG758	30
	8.00	13.4	SA	RGG758	26
	8.00	14.2	SA	RGL758	37
	10.00	15.4	DA	RDG7510	30
	10.00	15.4	SA	RGG7510	26
	10.00	16.2	SA	RGL7510	37
	12.00	17.4	DA	RDG7512	30
	12.00	17.4	SA	RGG7512	26
	12.00	18.2	SA	RGL7512	37
	13.00	18.4	DA	RDG7513	30
	13.00	18.4	SA	RGG7513	26
	13.13	19.4	SA	C7513C	12
	14.00	19.4	DA	RDG7514	30
	14.00	19.4	SA	RGG7514	26
80 Ton	13.13	20.4	DA	RD8013	34
100 Ton	0.63	3.4	SA	RLS1000S	18
	1.50	5.7	SA	RSS1002D	20
	1.50	6.5	DA	RH1001	22
	2.00	5.5	SA	R1002C	35
	2.00	6.6	DA	R1002D	36
	2.00	7.3	SA	R1002L	40
	2.00	7.8	DA	RDG1002	30
	2.00	7.8	SA	RGG1002	26
	2.00	8.7	SA	RGL1002	37
	2.00	8.6	SA	C1002C	12
	2.13	7.8	SA	RA1002	17
	2.25	5.5	SA	RSS1002	20
	4.00	9.8	DA	RDG1004	30
	4.00	9.8	SA	RGG1004	26
	4.00	10.7	SA	RGL1004	37
	3.00	10.0	SA	RH1003	21
	4.88	15.1	DA	RT1004	24
	6.00	9.5	SA	R1006C	35
	6.00	10.6	DA	R1006D	36
	6.00	11.3	SA	R1006L	40
	6.00	11.8	DA	RDG1006	30
	6.00	11.8	SA	RGG1006	26
	6.00	12.7	SA	RGL1006	37
	6.00	12.4	DA	RH1006	22
	6.25	11.8	SA	RA1006	17
	6.25	13.4	SA	RA1006L	39
	6.63	13.3	SA	C1006C	12
	6.63	13.8	DA	RD1006	34
	8.00	13.8	DA	RDG1008	30
	8.00	13.8	SA	RGG1008	26
	8.00	14.7	SA	RGL1008	37
	10.00	14.6	DA	R10010D	36
	10.00	15.3	SA	R10010L	40
	10.00	15.8	DA	RDG10010	30
	10.00	15.8	SA	RGG10010	26
	10.00	16.7	SA	RGL10010	37
	10.13	19.8	DA	RH10010	22
	10.25	15.6	SA	RA10010	17
	10.25	16.9	SA	C10010C	12
	12.00	17.8	DA	RDG10012	30
	12.00	17.8	SA	RGG10012	26
	12.00	18.7	SA	RGL10012	37
	13.00	18.8	DA	RDG10013	30
	13.00	18.8	SA	RGG10013	26
	13.13	20.3	DA	RD10013	34
	14.00	19.8	DA	RDG10014	30
	14.00	19.8	SA	RGG10014	26
	20.13	28.3	DA	RD10020	34
110 Ton	1.75	5.21	SA	RGP1102	41
150 Ton	0.56	4.0	SA	RLS1500S	18
	2.00	6.4	SA	R1502C	35
	2.00	7.4	DA	R1502D	36
	2.00	8.1	SA	R1502L	40
	2.00	8.5	DA	RDG1502	30
	2.00	8.5	SA	RGG1502	26
	2.00	9.6	SA	RGL1502	37
	4.00	10.5	DA	RDG1504	30
	4.00	10.5	SA	RGG1504	26
	4.00	11.6	SA	RGL1504	37
	5.00	12.1	DA	RH1505	22
	6.00	10.4	SA	R1506C	35
	6.00	11.4	DA	R1506D	36
	6.00	12.1	SA	R1506L	40
	6.00	12.5	DA	RDG1506	30
	6.00	12.5	SA	RGG1506	26
	6.00	13.6	SA	RGL1506	37
	6.63	14.9	DA	RD1506	34
	8.00	13.8	DA	RH1508	22
	8.00	14.5	DA	RDG1508	30
	8.00	14.5	SA	RGG1508	26
	8.00	15.6	SA	RGL1508	37
	10.00	14.4	SA	R15010C	35
	10.00	16.1	SA	R15010L	40
	10.00	16.5	DA	RDG15010	30
	10.00	16.5	SA	RGG15010	26
	10.00	17.6	SA	RGL15010	37
	12.00	18.5	DA	RDG15012	30
	12.00	18.5	SA	RGG15012	26
	12.00	19.6	SA	RGL15012	37
	13.00	19.5	DA	RDG15013	30
	13.00	19.5	SA	RGG15013	26
	13.13	21.4	DA	RD15013	34
	14.00	20.5	DA	RDG15014	30
	14.00	20.5	SA	RGG15014	26
	18.13	26.5	DA	RD15018	34

SA - Single-Acting
DA - Double-Acting

	Stroke (in.)	Retracted Height (in.)	Cylinder Movement	Order No.	Page No.
180 Ton	1.75	5.8	SA	RGP1802	41
200 Ton	2.00	7.5	SA	R2002C	35
	2.00	8.1	DA	R2002D	36
	2.00	9.3	DA	RDG2002	30
	2.00	9.3	SA	RGG2002	26
	2.00	10.6	SA	RGL2002	37
	2.00	9.5	SA	R2002L	40
	4.00	11.3	DA	RDG2004	30
	4.00	11.3	SA	RGG2004	26
	4.00	12.6	SA	RGL2004	37
	6.00	11.5	SA	R2006C	35
	6.00	12.1	DA	R2006D	36
	6.00	13.3	DA	RDG2006	30
	6.00	13.3	SA	RGG2006	26
	6.00	14.6	SA	RGL2006	37
	6.00	13.5	SA	R2006L	40
	6.63	16.0	DA	RD2006	34
	8.00	15.3	DA	RDG2008	30
	8.00	15.3	SA	RGG2008	26
	8.00	16.6	SA	RGL2008	37
	8.00	15.5	SA	R2008L	40
	8.00	16.1	DA	RH2008	22
	10.00	16.1	DA	R20010D	36
	10.00	17.3	DA	RDG20010	30
	10.00	17.3	SA	RGG20010	26
	10.00	18.6	SA	RGL20010	37
	12.00	19.3	DA	RDG20012	30
	12.00	19.3	SA	RGG20012	26
	12.00	20.6	SA	RGL20012	37
	13.00	20.3	DA	RDG20013	30
	13.00	20.3	SA	RGG20013	26
	13.13	22.5	DA	RD20013	34
	14.00	21.3	DA	RDG20014	30
	14.00	21.3	SA	RGG20014	26
	18.13	28.5	DA	RD20018	34
220 Ton	1.75	6.2	SA	RGP2202	41
250 Ton	2.00	10.3	DA	RDG2502	32
	2.00	10.3	SA	RGG2502	28
	2.00	11.7	SA	RGL2502	38
	3.00	11.4	SA	RSS2503	20
	4.00	12.3	DA	RDG2504	32
	4.00	12.3	SA	RGG2504	28
	4.00	13.7	SA	RGL2504	38
	6.00	14.3	DA	RDG2506	32
	6.00	14.3	SA	RGG2506	28
	6.00	15.7	SA	RGL2506	38
	8.00	16.3	DA	RDG2508	32
	8.00	16.3	SA	RGG2508	28
	8.00	17.7	SA	RGL2508	38
	10.00	18.3	DA	RDG25010	32
	10.00	18.3	SA	RGG25010	28
	10.00	19.7	SA	RGL25010	38
	12.00	20.3	DA	RDG25012	32
	12.00	20.3	SA	RGG25012	28
	12.00	21.7	SA	RGL25012	38
	13.00	21.3	DA	RDG25013	32
	13.00	21.3	SA	RGG25013	28
	14.00	22.3	DA	RDG25014	32
	14.00	22.3	SA	RGG25014	28
280 Ton	1.75	6.3	SA	RGP2802	41
	2.00	7.5	SA	R2802C	35
	2.00	9.2	DA	R2802D	36
	2.00	9.8	SA	R2802L	40
	6.00	11.5	SA	R2806C	35
	6.00	13.2	DA	R2806D	36
	6.00	13.8	SA	R2806L	40
	10.00	17.2	DA	R28010D	36
	10.00	17.8	SA	R28010L	40
300 Ton	2.00	10.7	DA	RDG3002	32
	2.00	10.7	SA	RGG3002	28
	2.00	13.7	SA	RGG3002	38
	4.00	12.7	DA	RDG3004	32
	4.00	12.7	SA	RGG3004	28
	4.00	15.7	SA	RGG3004	38
	6.00	14.7	DA	RDG3006	32
	6.00	14.7	SA	RGG3006	28
	6.00	17.7	SA	RGG3006	38
	6.00	17.3	DA	RD3006	34
	8.00	16.7	DA	RDG3008	32
	8.00	16.7	SA	RGG3008	28
	8.00	19.7	SA	RGG3008	38
	10.00	18.7	DA	RDG30010	32

	Stroke (in.)	Retracted Height (in.)	Cylinder Movement	Order No.	Page No.
300 Ton	10.00	18.7	SA	RGG30010	28
	10.00	21.7	SA	RGG30010	38
	12.00	20.7	DA	RDG30012	32
	12.00	20.7	SA	RGG30012	28
	12.00	23.7	SA	RGG30012	38
	13.00	21.7	DA	RDG30013	32
	13.00	21.7	SA	RGG30013	28
	13.00	24.8	DA	RD30013	34
	14.00	22.7	DA	RDG30014	32
	14.00	22.7	SA	RGG30014	28
355 Ton	2.00	9.1	SA	R3552C	35
	2.00	11.4	DA	R3552D	36
	2.00	11.5	SA	R3552L	40
	6.00	13.1	SA	R3556C	35
	6.00	15.4	DA	R3556D	36
	6.00	15.5	SA	R3556L	40
	10.00	17.1	SA	R35510C	35
400 Ton	2.00	12.1	DA	RDG4002	32
	2.00	12.1	SA	RGG4002	28
	2.00	15.6	SA	RGL4002	38
	4.00	14.1	DA	RDG4004	32
	4.00	14.1	SA	RGG4004	28
	4.00	17.6	SA	RGL4004	38
	6.00	16.1	DA	RDG4006	32
	6.00	16.1	SA	RGG4006	28
	6.00	19.3	DA	RD4006	34
	6.00	19.6	DA	RD4006	38
	8.00	18.1	DA	RDG4008	32
	8.00	18.1	SA	RGG4008	28
	8.00	21.6	SA	RGL4008	38
	10.00	20.1	DA	RDG40010	32
	10.00	20.1	SA	RGG40010	28
	10.00	23.6	SA	RGL40010	38
	12.00	22.1	DA	RDG40012	32
	12.00	22.1	SA	RGG40012	28
	12.00	25.6	SA	RGL40012	38
	13.00	23.1	DA	RDG40013	32
	13.00	23.1	SA	RGG40013	28
	13.00	26.3	DA	RD40013	34
	14.00	24.1	DA	RDG40014	32
	14.00	24.1	SA	RGG40014	28
430 Ton	1.75	7.0	SA	RGP4302	41
	2.00	10.4	SA	R4302C	35
	2.00	12.3	DA	R4302D	36
	2.00	13.1	SA	R4302L	40
	6.00	14.4	SA	R4306C	35
	6.00	16.3	DA	R4306D	36
	6.00	17.1	SA	R4306L	40
	10.00	20.3	DA	R43010D	36
	10.00	21.1	SA	R43010L	40
500 Ton	2.00	12.3	DA	RDG5002	32
	2.00	12.3	SA	RGG5002	28
	2.00	16.3	SA	RGL5002	38
	4.00	14.3	DA	RDG5004	32
	4.00	14.3	SA	RGG5004	28
	4.00	18.3	SA	RGL5004	38
	6.00	16.3	DA	RDG5006	32
	6.00	16.3	SA	RGG5006	28
	6.00	20.3	SA	RGL5006	38
	6.00	20.6	DA	RD5006	34
	8.00	18.3	DA	RDG5008	32
	8.00	18.3	SA	RGG5008	28
	8.00	22.3	SA	RGL5008	38
	10.00	20.3	DA	RDG50010	32
	10.00	20.3	SA	RGG50010	28
	10.00	24.3	SA	RGL50010	38
	12.00	22.3	DA	RDG50012	32
	12.00	22.3	SA	RGG50012	28
	12.00	26.3	SA	RGL50012	38
	13.00	23.3	DA	RDG50013	32
	13.00	23.3	SA	RGG50013	28
	13.00	27.6	DA	RD50013	34
	14.00	24.3	DA	RDG50014	32
	14.00	24.3	SA	RGG50014	28
565 Ton	1.75	8	SA	RGP5652	41
	2.00	12	SA	R5652C	35
	2.00	14	DA	R5652D	36
	2.00	15	SA	R5652L	40
	6.00	16	SA	R5656C	35
	6.00	18	DA	R5656D	36
	6.00	19	SA	R5656L	40
	10.00	20	SA	R56510C	35
	10.00	22	DA	R56510D	36
	10.00	23	SA	R56510L	40

	Stroke (in.)	Retracted Height (in.)	Cylinder Movement	Order No.	Page No.
600 Ton	2.00	12.8	DA	RDG6002	32
	2.00	12.8	SA	RGG6002	28
	2.00	17.0	SA	RGL6002	38
	4.00	14.8	DA	RDG6004	32
	4.00	14.8	SA	RGG6004	28
	4.00	19.0	SA	RGL6004	38
	6.00	16.8	DA	RDG6006	32
	6.00	16.8	SA	RGG6006	28
	6.00	21.0	SA	RGL6006	38
	8.00	18.8	DA	RDG6008	32
	8.00	18.8	SA	RGG6008	28
	8.00	23.0	SA	RGL6008	38
	10.00	20.8	DA	RDG60010	32
	10.00	20.8	SA	RGG60010	28
	10.00	25.0	SA	RGL60010	38
	12.00	22.8	DA	RDG60012	32
	12.00	22.8	SA	RGG60012	28
	12.00	27.0	SA	RGL60012	38
	13.00	23.8	DA	RDG60013	32
	13.00	23.8	SA	RGG60013	28
	14.00	24.8	DA	RDG60014	32
	14.00	24.8	SA	RGG60014	28

SA - Single-Acting
DA - Double-Acting

Models Shown:



Features

RUGGED, HIGH QUALITY CYLINDER USED FOR LIFTING AND PRESSING.

- Aluminum bronze bearing reduces wear caused by off-center loads.
- Maximum sized springs speed piston return and increase spring life.
- Collar threads are standard on all C-Series models, simplifying fixturing applications.
- Removable rubber boots protect collar threads during transport and storage.
- Solid steel cylinder body for durability.
- Chrome plated piston rod resists wear and corrosion.
- Wide range of accessories available that mount onto the piston rod, collar, or base.
- Base mounting holes standard on 5 through 55 ton cylinders and optional on 75 and 100 ton cylinders.
- A 3/8" NPTF female half coupler is standard.
- Complies with ANSI / ASME B30.1 Safety Standards.

C10010C used in this pulling application.



Best Practice for Cylinder Selection



Power Team recommends using 80% of the rated capacity and stroke to maximize product performance and safety.

Optional Cylinders Lifting Handle



Order Number: 420655OR9
Lifting handle for “C” series, 25 ton cylinders

Technical Dimensions, Base Mounting Holes

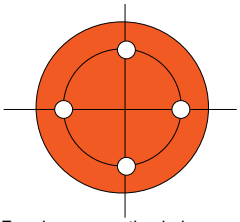

Four base mounting holes are 45° apart - standard on all models.

Cylinder Tonnage	5	10	15	25	30	55	75*	100*
# of Holes	2	2	2	2	2	2	4	4
Thread Size	1/4 - 20	5/16 - 18	3/8 - 16	1/2 - 13	1/2-13	1/2 - 13	3/4 - 10	1 - 8
Thread Depth (in.)	0.38	0.50	0.50	0.75	0.75	0.75	1.00	1.00
Bolt Circle Diameter (in.)	1.00	1.56	1.88	2.31	2.90	3.75	4.50	4.75

*** Consult Factory for optional base mounting holes.**

Technical Dimensions

Cylinder Load Caps furnished with "C" Series Cylinders:

5 ton cylinders	No. 201375
10 ton cylinders	No. 201362
15 ton cylinders	No. 201362
25 ton cylinders	No. 201412
55 ton cylinders	No. 36161
75 ton cylinders	No. 36161
100 ton cylinders	No. 36161

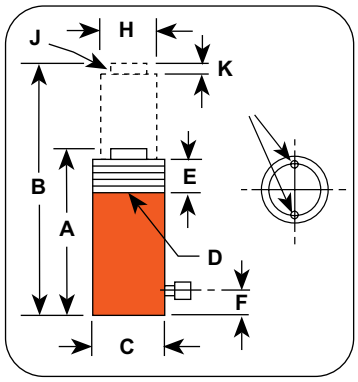

C10010C used in this lift application.



Ordering Information

Cyl. Cap. Tons	Stroke (in.)	Order No.	Oil Cap. (cu. in.)	A Retracted Height (In.)	B Extended Height (in.)	C Outside Dia. (in.)	D Collar Thread (in.)	E Piston Collar Thread Length (in.)	F Base to Port (in.)	H Piston Rod Dia. (in.)	J Piston Rod Int. Thread and Depth (in.)	K Rod Protrusion (in.)	Bore Dia. (in.)	Cylinder Effective Area (sq. in)	Int. Press. at Cap. (psi)	Tons at 10,000 (tons)	Prod. Wt. (lbs.)
5	1.00	C51C	1.10	4.34	5.44	1.50	1 1/2-16	1.13	0.75	1.00	3/4-16 x 0.63	0.25	1.13	0.994	10,061	4.97	2.25
	3.25	C53C	3.20	6.50	9.75	1.50	1 1/2-16	1.13	0.75	1.00	3/4-16 x 0.63	0.25	1.13	0.994	10,061	4.97	3.26
	5.25	C55C	5.20	8.50	13.75	1.50	1 1/2-16	1.13	0.75	1.00	3/4-16 x 0.63	0.25	1.13	0.994	10,061	4.97	4.00
	7.25	C57C	7.20	10.75	18.00	1.50	1 1/2-16	1.13	0.75	1.00	3/4-16 x 0.63	0.25	1.13	0.994	10,061	4.97	5.00
	9.25	C59C	9.20	12.75	22.00	1.50	1 1/2-16	1.13	0.75	1.00	3/4-16 x 0.63	0.25	1.13	0.994	10,061	4.97	5.80
10	1.00	C101C	2.20	3.63	4.63	2.25	2 1/4-14	1.13	0.75	1.50	1-8 x 0.75	0.25	1.69	2.236	8,948	11.20	4.00
	2.13	C102C	4.80	4.75	6.88	2.25	2 1/4-14	1.13	0.75	1.50	1-8 x 0.75	0.25	1.69	2.236	8,948	11.20	5.00
	4.13	C104C	9.20	6.75	10.88	2.25	2 1/4-14	1.13	0.75	1.50	1-8 x 0.75	0.25	1.69	2.236	8,948	11.20	6.70
	6.13	C106C	13.70	9.75	15.88	2.25	2 1/4-14	1.13	0.75	1.50	1-8 x 0.75	0.25	1.69	2.236	8,948	11.20	9.40
	8.13	C108C	19.90	11.75	19.88	2.25	2 1/4-14	1.13	0.75	1.50	1-8 x 0.75	0.25	1.69	2.236	8,948	11.20	11.00
	10.13	C1010C	22.60	13.75	23.88	2.25	2 1/4-14	1.13	0.75	1.50	1-8 x 0.75	0.25	1.69	2.236	8,948	11.20	13.00
	12.13	C1012C	27.10	15.75	27.88	2.25	2 1/4-14	1.13	0.75	1.50	1-8 x 0.75	0.25	1.69	2.236	8,948	11.20	14.60
	14.13	C1014C	31.60	17.75	31.88	2.25	2 1/4-14	1.13	0.75	1.50	1-8 x 0.75	0.25	1.69	2.236	8,948	11.20	16.20
	16.00	C1016C	36.10	20.50	36.50	2.25	2 1/4-14	1.13	0.75	1.50	1-8 x 0.75	0.25	1.69	2.236	8,948	11.20	18.50
15	1.00	C151C	3.10	4.88	5.88	2.75	2 3/4-16	1.13	0.75	1.75	1-8 x 0.75	0.25	2.00	3.142	9,549	15.70	7.50
	2.13	C152C	6.70	5.88	8.00	2.75	2 3/4-16	1.13	0.75	1.75	1-8 x 0.75	0.25	2.00	3.142	9,549	15.70	8.90
	4.13	C154C	12.90	7.88	12.00	2.75	2 3/4-16	1.13	0.75	1.75	1-8 x 0.75	0.25	2.00	3.142	9,549	15.70	11.50
	6.13	C156C	19.20	10.69	16.81	2.75	2 3/4-16	1.13	0.75	1.75	1-8 x 0.75	0.25	2.00	3.142	9,549	15.70	15.30
	8.13	C158C	25.50	12.69	20.81	2.75	2 3/4-16	1.13	0.75	1.75	1-8 x 0.75	0.25	2.00	3.142	9,549	15.70	17.90
	10.13	C1510C	31.80	14.69	24.81	2.75	2 3/4-16	1.13	0.75	1.75	1-8 x 0.75	0.25	2.00	3.142	9,549	15.70	20.70
	12.13	C1512C	38.10	16.69	28.81	2.75	2 3/4-16	1.13	0.75	1.75	1-8 x 0.75	0.25	2.00	3.142	9,549	15.70	23.20
	14.13	C1514C	44.40	18.69	32.81	2.75	2 3/4-16	1.13	0.75	1.75	1-8 x 0.75	0.25	2.00	3.142	9,549	15.70	26.00
	16.00	C1516C	50.30	20.56	36.56	2.75	2 3/4-16	1.13	0.75	1.75	1-8 x 0.75	0.25	2.00	3.142	9,549	15.70	28.20
25	1.00	C251C	5.10	5.50	6.50	3.38	3 5/16-12	1.94	1.00	2.25	1 1/2-16 x 0.88	0.38	2.56	5.15	9,699	25.80	11.90
	2.00	C252C	10.30	6.50	8.50	3.38	3 5/16-12	1.94	1.00	2.25	1 1/2-16 x 0.88	0.38	2.56	5.15	9,699	25.80	13.90
	4.00	C254C	20.60	8.50	12.50	3.38	3 5/16-12	1.94	1.00	2.25	1 1/2-16 x 0.88	0.38	2.56	5.15	9,699	25.80	17.60
	6.25	C256C	32.20	10.75	17.00	3.38	3 5/16-12	1.94	1.00	2.25	1 1/2-16 x 0.88	0.38	2.56	5.15	9,699	25.80	21.70
	8.25	C258C	42.50	12.75	21.00	3.38	3 5/16-12	1.94	1.00	2.25	1 1/2-16 x 0.88	0.38	2.56	5.15	9,699	25.80	25.60
	10.25	C2510C	52.80	14.75	25.00	3.38	3 5/16-12	1.94	1.00	2.25	1 1/2-16 x 0.88	0.38	2.56	5.15	9,699	25.80	29.30
	12.25	C2512C	63.20	16.75	29.00	3.38	3 5/16-12	1.94	1.00	2.25	1 1/2-16 x 0.88	0.38	2.56	5.15	9,699	25.80	33.10
	14.25	C2514C	73.50	18.75	33.00	3.38	3 5/16-12	1.94	1.00	2.25	1 1/2-16 x 0.88	0.38	2.56	5.15	9,699	25.80	36.80
30	8.25	C308C	53.55	12.80	21.05	4.00	4-12	2.00	1.00	2.50	1 1/2-16 x 0.88	0.38	2.87	6.46	9,243	32.50	36.5
55	2.00	C552C	22.10	6.88	8.88	5.00	5-12	2.19	1.38	3.13	None	0.13	3.75	11.04	9,959	55.20	32.50
	4.25	C554C	46.90	9.13	13.38	5.00	5-12	2.19	1.38	3.13	None	0.13	3.75	11.04	9,959	55.20	41.30
	6.25	C556C	69.00	11.13	17.38	5.00	5-12	2.19	1.38	3.13	None	0.13	3.75	11.04	9,959	55.20	51.00
	10.25	C5510C	113.20	15.13	25.38	5.00	5-12	2.19	1.38	3.13	None	0.13	3.75	11.04	9,959	55.20	67.00
	13.25	C5513C	146.30	18.13	31.38	5.00	5-12	2.19	1.38	3.13	None	0.13	3.75	11.04	9,959	55.20	78.00
75	6.13	C756C	97.40	12.38	18.50	5.75	5 3/4-12	1.75	1.25	3.75	None	0.13	4.50	15.90	9,434	79.50	73.50
	13.13	C7513C	208.70	19.38	32.50	5.75	5 3/4-12	1.75	1.25	3.75	None	0.13	4.50	15.90	9,434	79.50	109.50
100	2.00	C1002C	41.20	8.63	10.63	6.25	6 1/4-12	2.25	1.63	4.13	None	0.13	5.13	20.62	9,695	103.10	63.00
	6.63	C1006C	137.00	13.25	19.88	6.25	6 1/4-12	2.25	1.63	4.13	None	0.13	5.13	20.62	9,695	103.10	91.00
	10.25	C10010C	211.50	16.88	27.13	6.25	6 1/4-12	2.25	1.63	4.13	None	0.13	5.13	20.62	9,695	103.10	113.00

Model Shown:

C55CBT, C2514CBT



Features

THREADED PISTON ROD END AND BASE THREADS ACCOMMODATE ACCESSORIES AND ADAPTERS.

- Threaded cylinder collars, piston rod ends, and internal base threads simplify mounting.
- A 9796 3/8" NPTF female half coupler is standard with each cylinder. Oil port threads are 3/8" NPTF.
- Removable threaded rod cap.
- Factory accessories are do not de-rate tonnage.
- Complies with ANSI / ASME B30.1 Safety Standards.

Versatility and fixturing capabilities

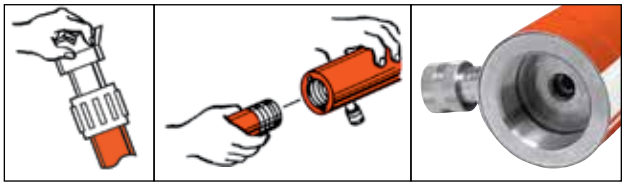

Analog Gauges



Improve your system visibility and safety by adding an inline hydraulic gauge to your circuit.

9440 (2.5 in.), **9052** (4 in.), and **9089** (6 in.)

Technical Dimensions

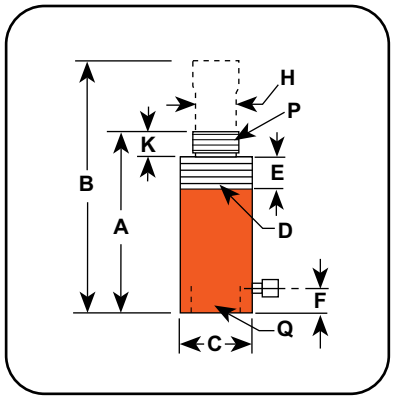

Ordering Information

Cyl. Cap. (tons)	Stroke (in.)	Order No.	Oil Cap. (cu. in.)	A Retracted Height (in.)	B Extended Height (in.)	C Outside Dia. (in.)	D Collar Thread (in.)	E Collar Thread Length (in.)	F Base to Port (in.)	H Piston Rod Dia. (in.)	K Piston Rod Protrusion (in.)	P Piston Rod Thread (NPT)	Q Internal Base Thread (NPSM) (in.)	Bore Dia. (in.)	Cylinder Effective Area (sq. in.)	Int. Press. at Cap. (psi)	Tons at 10,000 (tons)	Prod. Wt. (lbs.)
5	5.25	C55CBT	5.25	10.50	15.75	1.50	1 1/2–16	1.13	1.88	1.00	1.13	3/4–14	3/4–14	1.13	0.99	10,061	4.97	4.40
10	6.13	C106CBT	13.90	11.50	17.63	2.25	2 1/4–14	1.13	1.69	1.50	1.06	1 1/4–11.5	1 1/4–11.5	1.69	2.24	8,948	11.20	10.30
	10.13	C1010CBT	22.90	15.50	25.63	2.25	2 1/4–14	1.13	1.69	1.50	1.06	1 1/4–11.5	1 1/4–11.5	1.69	2.24	8,948	11.20	13.90
25	6.25	C256CBT	32.20	13.38	19.63	3.38	3 5/16–12	1.94	1.88	2.25	1.88	2–11.5	2–11.5	2.56	5.16	9,699	25.80	24.60
	14.25	C2514CBT	73.50	21.38	35.63	3.38	3 5/16–12	1.94	1.88	2.25	1.88	2–11.5	2–11.5	2.56	5.16	9,699	25.80	40.20

Model Shown:
RP25, RP55



Features

DESIGNED FOR PULLING AND TENSIONING APPLICATIONS.

- Heavy-duty compression spring provides long cycle life and rapid extension of piston.
- Spring automatically extends piston rod when pump pressure is released.
- Complies with ANSI / ASME B30.1 Safety Standards.

Clevis Ordering Information

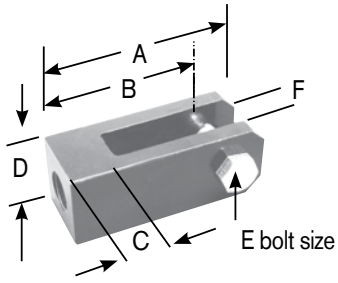

Use with Cyl. No.	Order No.	A (in.)	B (in.)	C (in.)	D (in.)	E (in.)	F (in.)
RP25	421057 *	5.13	4.31	1.31	2.00	0.75	1.00
RP55	421056**	6.00	5.00	1.50	2.50	0.88	1.25

* For base mounting, extension rod 351106 is required.
** For base mounting, extension rod 351075 is required.

Learn More - About Hydraulic Safety Insight

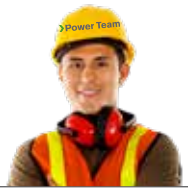

Looking for great safety suggestions? Visit our Resource Section to get a better understanding of hydraulic and mechanical safety insights on what to look for when working around hydraulics.

Technical Dimensions

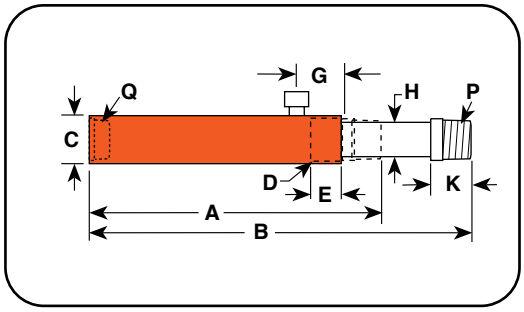

Ordering Information

Cyl. Cap. (tons)	Stroke (in.)	Order No.	Oil Cap. (cu. in.)	A Re-tracted Height (in.)	B Ex-tended Height (in.)	C Outside Dia. (in.)	D Collar Thread (in.)	E Collar Thread Length (in.)	G Cyl. Top to Port (in.)	H Piston Rod Dia. (in.)	K Piston Rod Protru-sion (in.)	P Piston Rod Thread (NPT)	Q Base Thread (NPT)	Bore Dia. (in.)	Cylinder Effective Area (sq. in.)	Int. Press. at Cap. (psi)	Tons at 10,000 (tons)	Prod. Wt . (lbs.)
2	5.00	RP25	2.76	9.38	14.56	1.75	1 1/2 - 16	1.00	1.69	0.75	1.00	3/4 - 14	3/4 - 14	1.13	0.55	7,250	2.75	4.00
5	5.50	RP55	6.22	11.88	17.38	2.25	2 1/4 - 14	1.00	1.69	1.19	1.38	1 1/4 - 11 1/2	1 1/4 - 11 1/2	1.69	1.13	8,850	5.65	11.00

Support Base



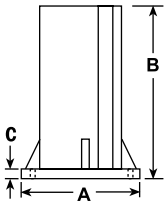

Cylinder Tons	Part No.	A (in.)	B (in.)	C (in.)
10	420062	7	5	7/16
25	420063	7	5	7/16

Swivel Cap



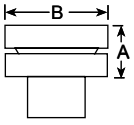

Cylinder Tons	Part No.	A (in.)	B (in.)
10 or 15	350144	0.88	1.38
25	350145	1.13	2.0
55 or 75	350376	1.25	2.81
100	351574	1.91	3.47

Threaded Connector



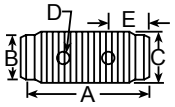

Cylinder Tons	Part No.	A (in.)	B (in.)	C (in.)	D (in.)	E (in.)
5	25748	1.75	0.88 Dia.	3/4 - 14 NPSM	0.19 Dia.	0.50
10	25664	1.63	1.44 Dia.	1 1/4 - 11 1/2 NPSM	0.31 Dia.	0.56
25	25654	2.25	2.13 Dia.	2 - 11 1/2 NPSM	0.38 Dia.	0.63

Piston Clevis



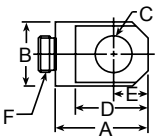

Cylinder Tons	Part No.	A (in.)	B (in.)	C (in.)	D (in.)	E (in.)	F (in.)
5	350095	1.75	1.13	.885	1.44	0.63	3/4 - 16
10 or 15*	350094	2.56	1.69	1.25	2.31	1.00	1 - 8
25**	420059	2.94	2.25	2.00	2.69	1.25	1 1/2 -16

* Can be used with RD106, RD1010 Cylinder.
** RD256 & RD2514

Threaded & Plain Adapters



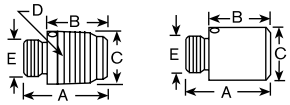

Cylinder Tons	Part No.	A (in.)	B (in.)	C (in.)	D (in.)	E (in.)
5	202178 (threaded)	1.63	1.13	1.06 Dia.	3/4 - 14 NPT	3/4 - 16 UNF-2A
10 or 15*	202179 (threaded)	1.81	1.06	1.63 Dia.	1 1/4 - 11 1/2 NPT	1 - 8 UNC-2A
25	202180 (threaded)	2.75	1.88	2.38 Dia.	2 - 11 1/2 NPT	1 1/2 - 16 UN-2A
10 or 15	350724 (plain)	2.00	1.25	1.48 Dia.	—	1 - 8 UNC-2A
25	350723 (plain)	2.13	1.25	2.25 Dia.	—	1 1/2 - 16 UN-2A

Cylinder Mounting Plate



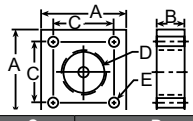

Cylinder Tons	Part No.	A (in.)	B (in.)	C (in.)	D (in.)	E (in.)
5	350099	3.00	1	2.13	1 1/2 - 16 UN-2B	0.34
10	350100	3.50	1	2.63	2 1/4 - 14 UNS-2B	0.34
15	350184	3.50	1	2.63	2 3/4 - 16 UN-2B	0.34
25	420064	5.00	2	3.97	3 5/16 - 12 UN-2B	0.66

Cylinder Flat Base



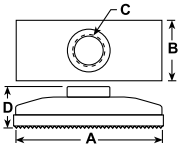

Cylinder Tons	Part No.	A (in.)	B (in.)	C (in.)	D (in.)
5	25750	4.50	2.50	3/4 - 14 NPSM	1.34
10 or 15*	32325	.375	3.50	1 1/4 - 11 1/2 NPSM	1.44

* Items require threaded adapter when used with "C" series cylinders. Can be used on threaded "CBT" cylinders without the use of an adapter.

Extension Rod



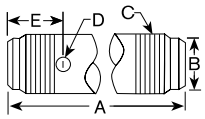

Cylinder Tons	Part No.	A (in.)	B (in.)	C (in.)	D (in.)	E (in.)
5	350895	5	0.88 Dia.	3/4 - 14 NPT	0.33 Dia.	2
5	38908	10	0.88 Dia.	3/4 - 14 NPT	0.33 Dia.	2
5	350896	18	0.88 Dia.	3/4 - 14 NPT	0.33 Dia.	2
10	350897	5	1.44 Dia.	1 1/4 - 11 1/2 NPT	0.33 Dia.	2
10	38909	10	1.44 Dia.	1 1/4 - 11 1/2 NPT	0.33 Dia.	2
10	350898	18	1.44 Dia.	1 1/4 - 11 1/2 NPT	0.33 Dia.	2

Cylinder Base Attachment



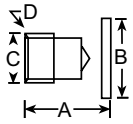

Cylinder Tons	Part No.	A (in.)	B (in.)	C (in.)	D (in.)
5	208380	1.63	1.75 Dia.	3/4 - 14 NPSM	0.28 Dia. (2) 1/4 - 20 UNC x 3/4 Lg. Socket Head Cap Screws
10	208381	1.88	2.50 Dia.	1 1/4 - 11 1/2 NPSM	0.34 Dia. (2) 5/16 - 18 UNC x 3/4 Lg. Socket Head Cap Screws
25	208382	2.38	3.38 Dia.	2 - 11 1/2 NPSM	0.53 Dia. (2) 1/2 - 13 UNC x 1 Lg. Socket Head Cap Screws

Plain & Serrated Saddles

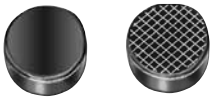

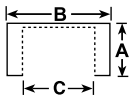

Cylinder Tons	Part No.	A (in.)	B (in.)	C (in.)
5	25746* (serrated)	1.13	1.31 Dia.	3/4 - 14 NPSM
10 or 15*	31772* (serrated)	1.13	2 Dia.	1 1/4 - 11 1/2 NPSM
25	31776* (serrated)	1.31	3 Dia.	2 - 11 1/2 NPSM
5	351575* (plain)	1.13	1.31 Dia.	3/4 - 14 NPSM
10	24016* (plain)	1.13	2 Dia.	1 1/4 - 11 1/2 NPSM
25	351576* (plain)	1.31	3 Dia.	2 - 11 1/2 NPSM

*** Items require threaded adapter when used with "C" series cylinders. They may be used on threaded "CBT" cylinders without the use of an adapter.**

Body Clevis †



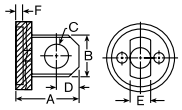

Cylinder Tons	Part No.	A (in.)	B (in.)	C (in.)	D (in.)	E (in.)	F (in.)
5	350096	2.06	1.13	0.63	0.63	0.56	0.25
10	350097	3.00	1.69	0.88	1.00	1.00	0.25
15	350098	3.06	1.69	0.88	1.00	1.00	0.25
25	420061	3.56	2.25	1.25	1.25	1.25	0.25

† Mounting screws are included.

90° "V" Base



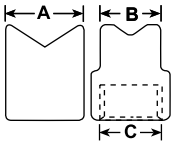

Cylinder Tons	Part No.	A (in.)	B (in.)	C (in.)
5	25388*	1.38	1.06	3/4 - 14 NPSM
10	25395*	2.13	2.13	1 1/4 - 14 NPSM

Plunger Base



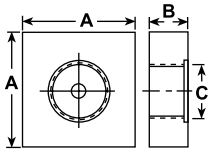

Cylinder Tons	Part No.	A (in.)	B (in.)	C (in.)
25	25652	6	1.25	2 - 11 1/2 NPSM

Model Shown:
RA552, RA1006



Features

LIGHTWEIGHT DESIGN, EASY TO TRANSPORT AND POSITION.

- Hard coated aluminum piston rod and cylinder bore resist wear and corrosion.
- Grooved piston top helps keep the load from sliding on top of piston.
- Aluminum body resists sparking in explosive environments.
- Complies with ANSI / ASME B30.1 Safety Standards.

Optional Cylinders Bases

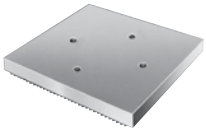

Aluminum Cylinder Base – For use when an enlarged cylinder base is needed or advantageous. Attaches to bottom of RA556, RA556L and RA5510 with four 3/8"–16 screws (included). Serrated base for extra stability.

Order No: 208406 – Aluminum cylinder base, 7" square. For use with RA556, RA556L and RA5510 cylinders.

Optional Cylinders Lifting Handles



Order Number: 420496BK2
Lifting handle for RA552, RA554 cylinders

Order Number: 420498BK2
Lifting handle for RA1002, RA10010 cylinders

Technical Dimensions

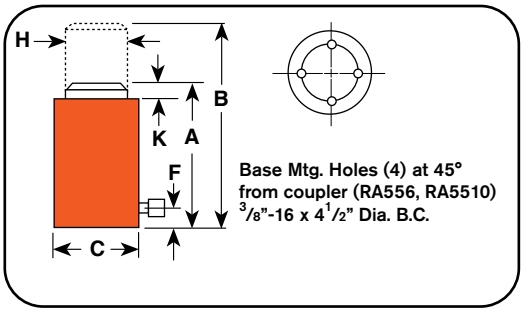

Ordering Information

Cyl. Cap. (tons)	Stroke (in.)	Order No.	Oil Cap. (cu. in.)	A Retracted Height (in.)	B Extended Height (in.)	C Outside Dia. (in.)	F Base to Port (in.)	H Piston Rod Dia. (in.)	K Piston Rod Protrusion (in.)	Bore Dia. (in.)	Cylinder Effective Area (sq. in.)	Int. Press. at Cap. (psi)	Tons at 10,000 (tons)	Prod. Wt. (lbs.)
20	2.13	RA202	9.41	6.38	8.50	3.75	1.25	2.00	0.31	2.38	4.43	9,030	22.15	7.70
	4.13	RA204	18.27	8.38	12.50	3.75	1.25	2.00	0.31	2.38	4.43	9,030	22.15	9.30
	6.13	RA206	27.13	10.38	16.50	3.75	1.25	2.00	0.31	2.38	4.43	9,030	22.15	11.30
30	2.13	RA302	13.79	7.38	9.50	4.25	1.25	2.50	0.38	2.88	6.49	9,250	32.45	11.10
	4.13	RA304	26.77	9.38	13.50	4.25	1.25	2.50	0.38	2.88	6.49	9,250	32.45	13.10
	6.13	RA306	39.75	11.38	17.50	4.25	1.25	2.50	0.38	2.88	6.49	9,250	32.45	15.10
55	2.13	RA552	23.50	6.75	8.88	5.25	1.38	3.13	0.25	3.75	11.04	9,960	55.20	16.20
	4.13	RA554	45.50	8.75	12.88	5.25	1.38	3.13	0.25	3.75	11.04	9,960	55.20	19.60
	6.13	RA556*	67.60	10.75	16.88	5.25	1.38	3.13	0.25	3.75	11.04	9,960	55.20	24.00
	10.00	RA5510*	110.40	15.13	25.13	5.25	1.38	3.13	0.25	3.75	11.04	9,960	55.20	31.80
100	2.13	RA1002	43.80	7.75	9.88	7.38	1.19	4.13	0.13	5.13	20.62	9,696	103.10	33.40
	6.25	RA1006*	129.00	11.75	18.00	7.38	1.19	4.13	0.13	5.13	20.62	9,696	103.10	49.90
	10.25	RA10010*	211.00	15.63	25.8	7.38	1.19	4.13	0.22	5.13	20.62	9,696	103.10	67.00

* Equipped with carrying handles.

Model Shown:
RLS100



Features

IDEAL LOW CLEARANCE OR TIGHT CONSTRAINT APPLICATIONS REQUIRING HIGH FORCES.

- Low height starting at 1.63" to 4.00".
- Cylinder body, piston and gland nut are "Power-Tech" treated for corrosion and abrasion resistance.
- Standard domed piston rod (5-30 tons) or swivel cap (50-150 tons) minimize effects of off-center loading.
- Unique heavy-duty spring provides fast piston return on all cylinders, except RLS50.
- Coupler is angled upward for extra clearance.
- Complies with ANSI / ASME B30.1 Safety Standards.

RLS200 used in this lifting application.



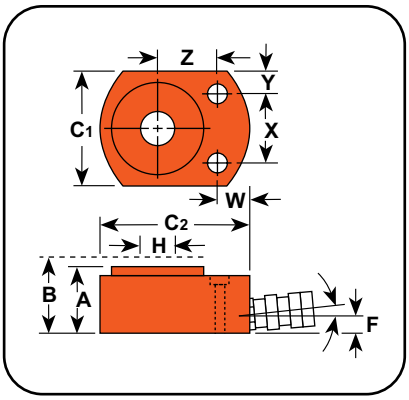

RLS1000S (with swivel load cap)



RLS Series ending with an "S" suffix denotes models equipped with a swivel load cap.

Mounting holes for "RLS" cylinders

RLS Series	Description
RLS50	0.34" C'bore x 0.25" deep, 0.22" thru hole
RLS100	0.42" C'bore x 0.34" deep, 0.28" thru hole
RLS200	0.62" C'bore x 0.41" deep, 0.41" thru hole
RLS300	0.62" C'bore x 0.44" deep, 0.28" thru hole

RLS Series	Description
RLS500S	0.70" C'bore x 0.50" deep, 0.47" thru hole
RLS750S	0.80" C'bore x 0.56" deep, 0.53" thru hole
RLS1000S	0.80" C'bore x 0.56" deep, 0.53" thru hole
RLS1500S	0.81" C'bore x 0.56" deep, 0.53" thru hole

Ordering Information

Cyl. Cap. (tons)	Stroke (in.)	Order No.	Oil Cap. (cu. in.)	A Retracted Height (in.)	B Extended Height (in.)	C1 Outside Dia. (in.)	C2 Outside Dia. (in.)	F Base to Port (in.)	H Piston Rod Dia. (in.)	W Mounting Hole Location (in.)	X Mounting Hole Location (in.)	Y Mounting Hole Location (in.)	Z Mounting Hole Location (in.)	Bore Dia. (in.)	Cylinder Effective Area (sq. in.)	Int. Press. at Cap. (psi)	Tons at 10,000 (tons)	Prod. Wt. (lbs.)
5	0.56	RLS50	0.62	1.63	2.19	1.63	2.56	0.75	0.63	0.75	1.13	0.25	1.00	1.13	0.994	10,061	4.97	2.20
10	0.44	RLS100	1.00	1.75	2.19	2.19	3.25	0.63	0.75	0.69	1.44	0.38	1.31	1.69	2.236	8,943	11.18	3.30
20	0.44	RLS200	2.00	2.00	2.44	3.00	4.00	0.66	1.13	0.72	1.94	0.53	1.56	2.38	4.430	9,029	22.15	5.60
30	0.50	RLS300	3.20	2.31	2.81	3.75	4.50	0.72	1.38	0.81	2.06	0.84	1.75	2.88	6.492	9,242	32.46	8.60
50	0.63	RLS500S	6.00	2.63	3.25	4.50	5.50	0.84	1.75	0.94	2.63	0.94	2.13	3.50	9.621	10,394	48.10	14.00
75	0.63	RLS750S	9.90	3.13	3.75	5.53	6.50	1.00	2.13	0.94	3.00	1.27	2.59	4.50	15.904	9,431	79.52	23.30
100	0.63	RLS1000S	12.30	3.38	4.00	6.00	7.00	1.00	2.50	0.81	3.00	1.50	2.81	5.00	19.635	10,186	98.17	30.00
150	0.56	RLS1500S	17.20	4.00	4.56	7.50	8.50	1.31	3.00	1.31	4.63	1.44	3.13	6.25	30.680	9,778	153.39	52.00

Model Shown:

RSS2503, RSS302



Features

IDEAL FOR CONFINED AREAS WITH 3 1/2" TO 11 7/16" CLEARANCE.

- "Power-Tech" nitro-carburization surface treatment inhibits corrosion and provides exceptional durability for the rod and piston.
- Heavy-duty return spring (except for double-acting models) provides fast piston return & low collapsed height.
- Coupler on 10 - 50 ton models is angled upward 5° for added clearance.
- Grooved piston top keeps load from sliding.
- Cylinders can be "dead-ended" at full capacity.
- Removable carrying handles on 100 and 250 ton models.
- Complies with ANSI / ASME B30.1 Safety Standards.

Technical Dimensions

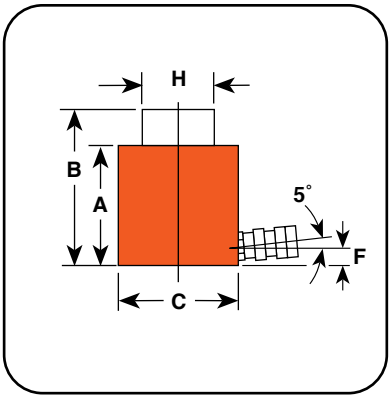

Optional Swivel Load Caps Ordering Info

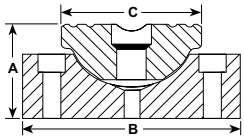

Reduce the effects of off-center loading. Tilts up to 5 degrees. Radial grooves on top of cap reduce load slippage. Notch across face of each cap helps keep loads having a protruding or round shaped centered.

Use with Cyl. No.	Swivel Cap Order No.	Wt. (lbs.)	A (in.)	B (in.)	C (in.)
RSS101	350320	0.5	1.00	1.44	1.44
RSS202	350321	1.3	1.38	2.13	2.13
RSS302	350322	1.6	1.38	2.50	2.13
RSS502	350331	2.7	1.44	3.25	2.13
RSS1002	350332	6.6	1.81	4.38	3.13

Cribbing Block Operation

Convert Power Team "Shorty" cylinders to mechanical cribbing devices. They are more stable and safe than timber or other awkward, makeshift methods. Ideal for lifting applications such as structure moving. Reduces cribbing time dramatically. In effect, increases the stroke of the cylinder as stacking pads act as cylinder extensions:

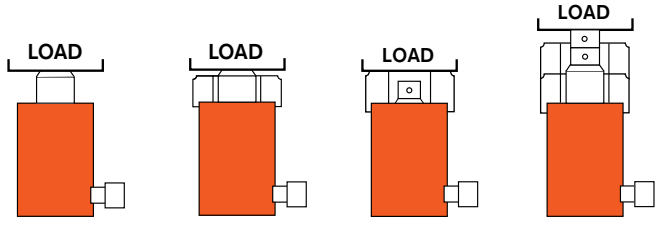

1. Extend cylinder load
2. Insert lower ring. Retract cylinder.
3. Insert pad.
4. Lift load by adding rings and pads.

RSS302 is perfect for any bridge construction application.



Ordering Information

Cyl. Cap. (tons)	Stroke (in.)	Order No.	Oil Cap. (cu. in.)		A Retracted Height (in.)	B Extended Height (in.)	C Outside Dia. (in.)	F Base to Port (in.)	H Piston Rod Dia. (in.)	Bore Dia. (in.)	Cylinder Effective Area (sq. in.)	Int. Press. at Cap. (psi)	Tons at 10,000 (tons)	Prod. Wt . (lbs.)
			Push	Return							Push	Push	Push	
10	1.50	RSS101	3.40	–	3.50	5.00	2.75	0.63	1.50	1.69	2.24	8,943	11.20	6.00
20	1.75	RSS202	7.70	–	3.75	5.50	3.56	0.63	2.16	2.38	4.43	9,029	22.10	9.90
30	2.44	RSS302	15.80	–	4.63	7.06	4.00	0.63	2.50	2.88	6.49	9,243	32.50	14.70
50	2.38	RSS502	22.80	–	5.00	7.38	4.88	0.75	3.13	3.50	9.62	10,393	48.10	23.20
100	2.25	RSS1002	44.20	–	5.50	7.75	6.63	0.94	4.38	5.00	19.63	10,186	98.20	47.30
100	1.50	RSS1002D*	29.40	12.90	5.69	7.19	6.88	0.94	3.75	5.00	19.63	10,186	98.20	54.60
250	3.00	RSS2503	150.60	–	11.44	14.44	9.88	1.81	5.50	8.00	50.22	9,956	251.10	220.00

* Note: RSS1002D is double-acting.
+ Optional carry handle for RSS502 is 421312OR9

Optional Cylinders Cribbing Blocks

Cribbing blocks are shown on a 30 ton RSS302 “Shorty” cylinder. Each kit includes:



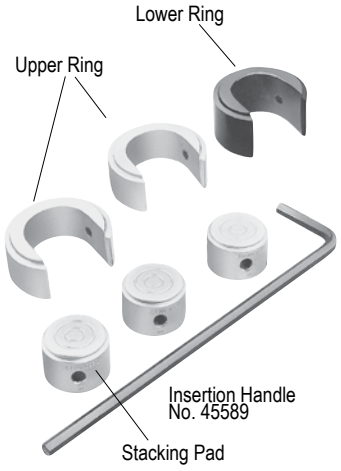

The Insertion tool (45589) is used for keeping hand from load.

Cribbing Block Ordering Information

For Use With		30 Ton Cylinder Number RSS302			50 Ton Cylinder Number RSS502			100 Ton Cylinder Number RSS1002		
Order No.		30 Ton Set Number CB30			50 Ton Set Number CB50			100 Ton Set Number CB100		
		Lower Ring	Upper Ring	Stacking Pad	Lower Ring	Upper Ring	Stacking Pad	Lower Ring	Upper Ring	Stacking Pad
Number included in set		1	2	3	1	2	3	1	3	4
Outside Diameter	(in.)	4.50	4.50	2.75	5.50	5.50	3.38	7.39	7.39	4.75
Inside Diameter	(in.)	2.81	2.81	–	3.45	3.45	–	4.81	4.81	–
Height, each	(in.)	2.28	1.80	1.78	2.22	1.72	1.69	2.13	1.75	1.72
Total stacked height of Rings in Set	(in.)	5.88			5.66			7.38		
Weight of Set	(lbs.)	20			28			64		

Note: Each set includes one Insertion Handle 45589 - 0.5" Hex x 18" Long, 4" Bend

Model Shown:

RH203, RH503



Features

IDEAL FOR CABLE PULLING AND TENSIONING, ANCHOR BOLTS, FORCING SCREWS, ETC.

- Cylinder body, piston and gland nut "Power-Tech" treated for corrosion and abrasion resistance.
- Most models feature threaded collar, excludes the RH203 and RHA306 models.
- All cylinders are furnished with a 9796 3/8" NPT female half coupler, except the RH120.
- Aluminum cylinder body and piston are featured on the RHA306 cylinder.
- Complies with ANSI / ASME B30.1 Safety Standards.

Optional Piston Head Inserts



For Use With:	Threaded Insert	Order No.
RH102, RH108	3/4"–16	28632
RH203	1"–8	28612
RH302, RH306	1 1/4"–7	38904
RH303	1 1/4"–7	28644
RH503	15/8"–51/2	38855
RH603, RH605	1 5/8"–51/2	34251

Optional Cylinders Lifting Handles



Order Number: 252215

Lifting handle for RH303, RH306, AND RH306D, AND RHA306

Technical Dimensions

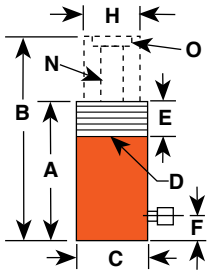



RH Series Cylinders are equipped with a through hole design for additional applications and uses for pulling.

Ordering Information

Cyl. Cap. (tons)	Stroke (in.)	Order No.	Oil Cap. (cu. in.)	A Retracted Height (in.)	B Extended Height (in.)	C Outside Dia. (in.)	D Collar Thread (in.)	E Collar Thread Length (in.)	F Base to Port (in.)	H Piston Rod Dia. (in.)	N Center Hole Dia. (in.)	O Insert Thread Size (in.)	Mounting Holes and Bolt Circle (in.)	Cylinder Effective Area (sq. in.)	Int. Press. at Cap. (psi)	Tons at 10,000 (tons)	Prod. Wt. (lbs.)
10	2.50	RH102	5.52	5.31	7.81	3.00	-	-	1.00	2.06	0.77	1 3/4 - 12	1/4-20 x 2 3/8	2.21	9,054	11.00	9.00
	8.00	RH108	17.68	11.31	19.31	3.00	-	-	1.00	2.06	0.77	1 3/4 - 12	1/4-20 x 2 3/8	2.21	9,054	11.00	18.70
12	0.31	RH120**	0.87	2.19	2.50	2.75	2 3/4 - 16	1.25	0.38	1.38	0.80	3/4 - 16	5/16-18 x 2	2.76	8,692	13.80	3.00
	1.63	RH121	4.49	4.81	6.44	2.75	2 3/4 - 16	1.25	1.00	1.38	0.80	-	-	2.76	8,692	13.80	6.60
	1.63	RH121T*	4.49	4.81	6.44	2.75	2 3/4 - 16	1.25	1.00	1.38	0.81	3/4 - 16	-	2.76	8,692	13.80	6.60
	3.00	RH123	8.29	7.25	10.25	2.75	2 3/4 - 16	0.81	1.00	1.38	0.81	-	-	2.76	8,692	13.80	8.90
20	2.00	RH202	9.45	6.13	8.13	3.88	3 7/8 - 12	1.50	1.00	2.13	1.08	1 9/16 - 16	3/8-16 x 3 1/4	4.72	8,466	23.60	16.10
	3.00	RH203	11.76	6.06	9.06	4.00	-	-	1.00	2.75	1.05	2 1/4 - 12	3/8-16 x 3 1/4	3.92	10,186	19.60	20.00
	6.00	RH206	28.35	12.13	18.13	3.88	3 7/8 - 12	1.50	1.00	2.13	1.08	1 9/16 - 16	3/8-16 x 3 1/4	4.72	8,466	23.60	30.20
30	2.50	RH302	15.85	6.25	8.75	4.75	4 3/4 - 12	1.50	1.16	3.25	1.30	2 3/4 - 12	7/16-20 x 3 5/8	6.34	9,457	31.70	25.60
	5.88	RHA306	38.10	11.16	17.03	5.13	-	-	1.25	3.25	1.28	2 5/8 - 8	-	6.34	9,457	31.70	21.90
	6.00	RH306	38.10	9.75	15.75	4.75	4 3/4 - 12	1.50	1.16	3.25	1.28	2 3/4 - 12	7/16-20 x 3 5/8	6.34	9,457	31.70	39.00
50	3.00	RH503	32.58	7.13	10.13	6.00	6 - 12	2.00	1.25	4.13	1.67	3 1/4 - 12	5/8-18 x 4 3/4	10.86	9,208	54.30	46.60
60	3.00	RH603*	37.00	9.25	12.25	6.25	6 1/4 - 12	2.50	1.00	3.59	2.13	3 - 12	1/2-13 x 5 1/8	12.31	9,750	61.60	60.00
60	6.00	RH606*	73.86	12.25	18.25	6.25	6 1/4 - 12	2.50	1.00	3.59	2.13	3 - 12	1/2-13 x 5 1/8	12.31	9,750	61.60	78.00
100	3.00	RH1003*	61.80	10.00	13.00	8.38	-	-	1.25	5.00	3.13	4 1/8 - 12	-	20.62	9,700	103.10	115.00

* Supplied with carrying handles.

Aluminum

** RH120 and RH121T do not have an internal threaded insert, but do have a 3/4-16 internal thread. The RH120 inlet port is 1/4" NPTF.

Model Shown:
RH605



Features

FOR PULLING AND TENSIONING OF CABLES, ANCHOR BOLTS, AND FORCING SCREWS.

- Plated piston rod resists wear and superior packings provide high cycle life without leakage.
- Built-in safety feature prevents over-pressurization of the retraction circuit.
- Corrosion-resistant standpipe has “Power-Tech” treatment.
- 30, 60, 100 Ton Double-Acting Models Feature Threaded Collar.
- Aluminum cylinder body and piston are featured on the RHA604D cylinder.
- Each cylinder has 9796 3/8” NPTF female half couplers. The 60 ton through 200 ton steel models are equipped with removable carrying handles.

Technical Dimensions

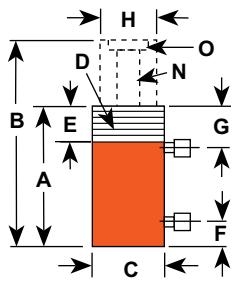



RH Series Cylinders are equipped with a through hole design for additional applications and uses for pulling.

Optional Piston Head Inserts



For Use With:	Threaded Insert	Order No.
RH102, RH108	3/4”–16	28632
RH203	1”–8	28612
RH302, RH306	1 1/4”–7	38904
RH303	1 1/4”–7	28644
RH503	15/8”–51/2	38855
RH603, RH605	1 5/8”–51/2	34251

Optional Cylinders Lifting Handles



Order Number: 421312OR9
Lifting handle for RH303 and RH306D

Ordering Information

Cyl. Cap. (tons) Push	Cyl. Cap. (tons) Pull	Stroke (in.)	Order No.	Oil Cap. (cu. in.) Push	Oil Cap. (cu. in.) Pull	A Retracted Height (in.)	B Extended Height (in.)	C Outside Dia. (in.)	D Collar Thread (in.)	E Collar Thread Length (in.)	F Base to Port (in.)	G Cyl. Top to Port (in.)	H Piston Rod Dia. (in.)	N Center Hole Dia. (in.)	O Insert Thread Size (in.)	Mounting Holes and Bolt Circle (in.)	Cylinder Effective Area (sq. in.) Push	Cylinder Effective Area (sq. in.) Pull	Int. Press. at Cap. (psi) Push	Int. Press. at Cap. (psi) Pull	Tons at 10,000 (tons) Push	Tons at 10,000 (tons) Pull	Prod. Wt. (lbs.)
30	15	3.00	RH303	17.60	10.20	7.06	10.06	4.75	-	-	1.00	1.63	2.50	1.28	2 - 12	3/8-16 x 3 5/8	5.89	3.38	10,200	8,876	29.50	16.90	29.80
30	15	6.00	RH306D	35.34	20.28	11.06	17.06	4.75	-	-	1.00	1.63	2.50	1.27	2 - 12	7/16-20 x 3 5/8	5.89	3.38	10,200	8,876	29.50	16.90	45.00
30	20	10.13	RH3010	66.00	41.00	17.25	27.38	4.50	4 1/2 -12	1.63	1.75	3.19	2.38	1.31	1 7/8 - 16	-	6.54	4.04	9,174	9,901	32.70	20. 20	61.00
60	25	4.00	RHA604D	49.20	20.60	9.50	13.50	7.00	-	-	1.56	2.25	4.00	2.13	3 - 12	1/2-13 x 5 1/8	12.31	5.15	9,750	9,709	61.50	27.70	35.60
60	25	5.00	RH605*	61.55	25.77	9.50	14.50	6.53	-	-	1.00	1.75	4.00	2.13	3 - 12	1/2-13 x 5 1/8	12.31	5.15	9,750	9,709	61.50	27.70	73.00
60	40	10.13	RH6010*	133.00	87.00	18.06	28.19	6.25	6 1/4 -12	1.88	2.13	3.22	3.63	2.13	3 - 16	-	13.14	8.59	9,132	9,313	65.70	42.90	120.00
100	45	1.50	RH1001	32.10	14.20	6.50	8.00	8.38	-	-	1.25	2.31	5.00	3.14	4 - 16	5/8-11 x 7	21.39	9.43	9,350	9,544	106.90	47.10	85.00
100	50	6.00	RH1006*	120.20	65.60	12.38	18.38	7.25	-	-	1.47	2.33	4.38	2.06	-	1/2-13 x 5 1/2	20.03	10.93	9,986	9,150	100.10	54.70	95.00
100	45	10.13	RH10010*	216.60	95.50	19.50	29.63	8.50	8 1/2 -12	2.25	2.50	3.61	5.50	3.14	4 1/2 - 12	-	21.39	9.43	9,350	9,544	106.90	47.10	240.00
150	70	5.00	RH1505*	150.90	73.60	12.25 †	17.25	8.50	-	-	1.47	2.69	5.50	2.56	-	-	30.10	14.70	9,937	9,524	150.90	73.60	148.00
150	75	8.00	RH1508*	239.60	127.20	13.75	21.75	9.75	-	-	1.55	2.41	6.00	3.16	5 - 12	-	29.95	15.90	10,015	9,434	149.80	79.50	227.00
200	75	8.00	RH2008*	323.60	127.60	16.06	24.06	10.75	-	-	2.25	3.22	7.50	4.06	6 - 12	1 1/4-7 x 7 3/4	40.45	15.95	9,888	9,404	202.30	79.80	311.00

* Supplied with carrying handles.

† Measured with serrated load cap installed.

Aluminum

Model Shown:

RT302, RT1004



Features

IDEAL FOR PULLING AND PRESSING APPLICATION, REQUIRING HIGHER FORCES.

- Cylinders withstand full “dead-end” loads.
- Compact design is ideal for applications in which space is limited.
- Basic head can be changed from a tapped hole to plain hole by simply changing the insert.
- Pistons have “Power-Tech” treatment for corrosion and abrasion resistance.
- Complies with ANSI / ASME B30.1 Safety Standards.

Center Hole Design Cylinders



RT Series pullers are equipped with a through hole design for additional applications and uses for pulling requiring high force.

Optional Plain Head Cylinder Inserts



Switch from a tapped hole to a plain hole quickly with these cylinder head inserts. They are held in place with a socket screw. Plain hole permits use of a speed nut for re-adjusting cylinder after extension.

For Use With:	Threaded Order No.	Plain Order No.
RT172	21669	21714
RT302	21873	21872
RT503	22274	22275
RT1004	24197	24196

Learn More - About Hydraulic Safety Insight



Looking for great safety suggestions? Visit our Resource Section to get a better understanding of hydraulic and mechanical safety insights on what to look for when working around hydraulics.

RT Series center hole cylinder is versatile for strand or pull applications

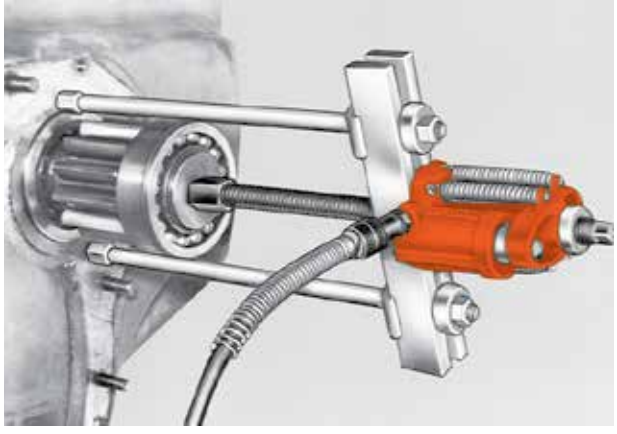

Technical Dimensions, Base Mounting Holes

Dimensions for reference only.

Single-Acting, Spring Return Cylinders

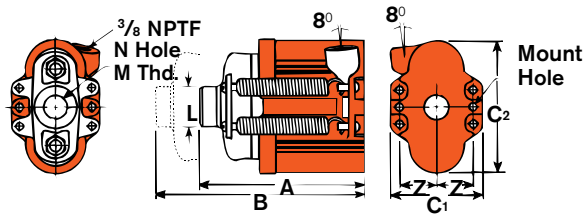

Double-Acting Cylinder (RT1004)

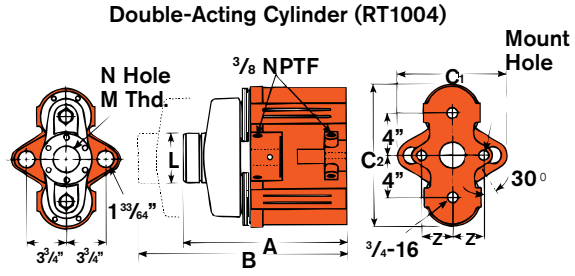

Ordering Information

Cyl. Cap. (tons)	Stroke (in.)	Order No.	Oil Cap. (cu. in.)		A	B	C1	C2	L	M	N	Z	Mount Hole	Cylinder Effective Area	Int. Press. at Cap.	Tons at 10,000	Prod. Wt .
					Retract-ed Height	Extend-ed Height	Outside Dia.		Load Cap Dia.	Load Cap Thread	Center Hole Dia.	Mount Hole Location					
			Push	Return	(in.)	(in.)	(in.)	(in.)	(in.)	(in.)	(in.)	(in.)	(in.)	(sq. in.)	(psi)	(tons)	(lbs.)
														Push	Push	Push	
17.5	2.00	RT172	7.06	–	6.88	8.88	3.75	5.75	1.75	1” - 8	1.03	1.50	11/32	3.53	9,915	17.70	14.60
30	2.50	RT302	15.70	–	8.44	10.94	4.25	7.50	2.25	1 1/4” - 7	1.30	1.81	15/32	6.28	9,554	31.40	28.20
50	3.00	RT503	29.40	–	10.56	13.56	5.88	9.38	2.88	1 5/8” - 5 1/2	1.67	2.38	21/32	9.81	10,193	49.10	56.00
100	4.88	RT1004*	96.50	63.20	15.13	20.00	10.50	12.25	4.75	2 1/2” - 8	2.56	2.88	25/32	19.24	10.395	96.20	160.00

* The RT1004 has a bypass when full stroke is reached, preventing over-pressurization of the cylinder.

NOTE: Each cylinder complete with threaded cylinder head insert, cylinder half coupler and cylinder attaching screws.

Model Shown:
RGG Family



Features

HEAVY LIFT, GENERAL PURPOSE CYLINDER FOR MAINTENANCE APPLICATIONS.

- Single-Acting, load return hydraulic cylinders, tonnages ranging from 55 - 200.
- Patented swivel cap provides concentrated load centering up to 5 degrees.
- Sealing technology provides rod lubrication to reduce friction and wear.
- Floating piston design resists side loading conditions.
- "Power-Tech" nitro-carburization surface treatment inhibits corrosion and provides exceptional durability
- Base mounting holes standard on all models (they are not maintained to port location).
- One high flow 3/8" NPTF female half coupler and removable carry strap w/ eyelets are included.
- Complies with ANSI / ASME B30.1 Safety Standards.

RGG Series Design Features

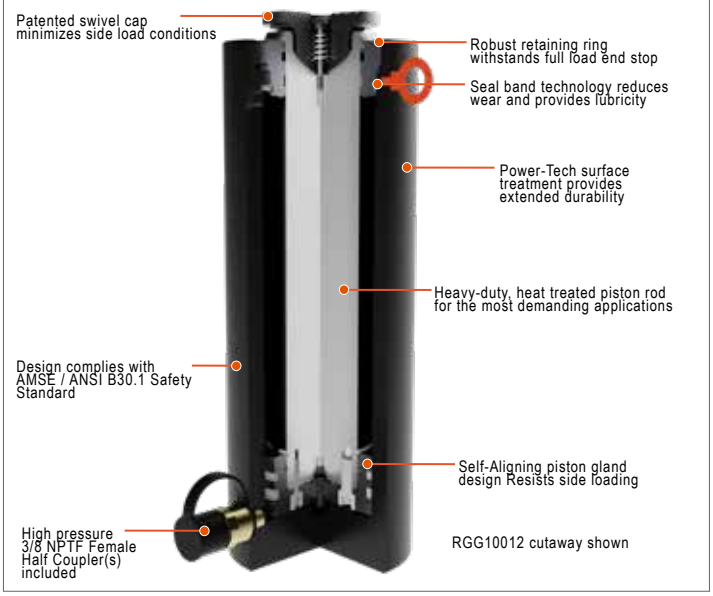

Technical Dimensions, Base Mounting Holes

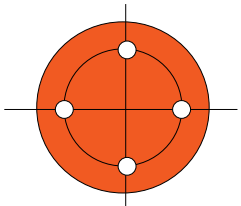

Four base mounting holes are 45° apart - standard on all models.

Tonnage	55	75	100	150	200
# of Base Mounting Holes	4	4	4	4	4
Base thread size	M12X1.75 - 6H	M12X1.75 - 6H	M16X1.5 - 6H	M16X1.5 - 6H	M20X1.5 - 6H
Base thread depth (in)	0.709	0.709	0.62	0.9	1.2
Base Mounting Diameter (in.)	3.03	3.66	4.00	5.12	5.72
Orientation	Mounting hole orientation is not maintained to port location.				

Cylinder Selection



Power Team recommends using 80% of the rated capacity and stroke to maximize product performance and safety.

Custom stroke lengths are available, contact your local Power Team Sales Office for details and availability.

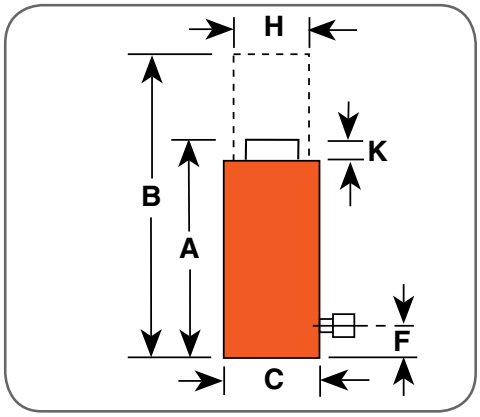

Ordering Information

Tonnage	Stroke	Order No.	A	B	C	F	H	K	Swivel Cap Dia.	Bore Dia.	Cyl. Eff. Area (Adv.)	Oil Cap.	Internal Press at Cap.	Tons at 10,000 PSI	Weight w/o Oil
			Ret. Height	Ext. Height	Out. Dia.	Base to Port	Piston Rod Dia.	Swivel Cap Protrusion							
(US Tons)	(in.)		(in.)	(in.)	(in.)	(in.)	(in.)	(in.)	(in.)	(in.)	(sq. in.)	(cu. in.)	(psi)	(US Tons)	(lbs.)
55	2	RGG552	7.12	9.12	5.16	0.87	2.75	0.69	2.78	3.75	11.04	22.09	9960	55.2	34.6
	4	RGG554	9.12	13.12	5.16	0.87	2.75	0.69	2.78	3.75	11.04	44.18	9960	55.2	43.6
	6	RGG556	11.12	17.12	5.16	0.87	2.75	0.69	2.78	3.75	11.04	66.27	9960	55.2	52.5
	8	RGG558	13.12	21.12	5.16	0.87	2.75	0.69	2.78	3.75	11.04	88.35	9960	55.2	61.5
	10	RGG5510	15.12	25.12	5.16	0.87	2.75	0.69	2.78	3.75	11.04	110.44	9960	55.2	70.5
	12	RGG5512	17.12	29.12	5.16	0.87	2.75	0.69	2.78	3.75	11.04	132.53	9960	55.2	79.4
	13	RGG5513	18.12	31.12	5.16	0.87	2.75	0.69	2.78	3.75	11.04	143.58	9960	55.2	83.9
	14	RGG5514	19.12	33.12	5.16	0.87	2.75	0.69	2.78	3.75	11.04	154.62	9960	55.2	88.4
75	2	RGG752	7.44	9.44	5.78	0.90	3.13	0.76	3.24	4.38	15.03	30.07	9978	75.2	45.0
	4	RGG754	9.44	13.44	5.78	0.90	3.13	0.76	3.24	4.38	15.03	60.13	9978	75.2	55.7
	6	RGG756	11.44	17.44	5.78	0.90	3.13	0.76	3.24	4.38	15.03	90.20	9978	75.2	66.4
	8	RGG758	13.44	21.44	5.78	0.90	3.13	0.76	3.24	4.38	15.03	120.26	9978	75.2	77.1
	10	RGG7510	15.44	25.44	5.78	0.90	3.13	0.76	3.24	4.38	15.03	150.33	9978	75.2	87.9
	12	RGG7512	17.44	29.44	5.78	0.90	3.13	0.76	3.24	4.38	15.03	180.39	9978	75.2	98.6
	13	RGG7513	18.44	31.44	5.78	0.90	3.13	0.76	3.24	4.38	15.03	195.42	9978	75.2	104.0
	14	RGG7514	19.44	33.44	5.78	0.90	3.13	0.76	3.24	4.38	15.03	210.46	9978	75.2	109.3
100	2	RGG1002	7.79	9.79	6.53	0.94	3.75	0.92	3.87	5.13	20.63	41.26	9695	103.1	59.2
	4	RGG1004	9.79	13.79	6.53	0.94	3.75	0.92	3.87	5.13	20.63	82.51	9695	103.1	72.7
	6	RGG1006	11.79	17.79	6.53	0.94	3.75	0.92	3.87	5.13	20.63	123.77	9695	103.1	86.2
	8	RGG1008	13.79	21.79	6.53	0.94	3.75	0.92	3.87	5.13	20.63	165.03	9695	103.1	99.8
	10	RGG10010	15.79	25.79	6.53	0.94	3.75	0.92	3.87	5.13	20.63	206.28	9695	103.1	113.3
	12	RGG10012	17.79	29.79	6.53	0.94	3.75	0.92	3.87	5.13	20.63	247.54	9695	103.1	126.8
	13	RGG10013	18.79	31.79	6.53	0.94	3.75	0.92	3.87	5.13	20.63	268.17	9695	103.1	133.6
	14	RGG10014	19.79	33.79	6.53	0.94	3.75	0.92	3.87	5.13	20.63	288.80	9695	103.1	140.3
150	2	RGG1502	8.45	10.45	7.75	1.23	4.50	0.91	4.63	6.25	30.68	61.36	9779	153.4	91.3
	4	RGG1504	10.45	14.45	7.75	1.23	4.50	0.91	4.63	6.25	30.68	122.71	9779	153.4	109.6
	6	RGG1506	12.45	18.45	7.75	1.23	4.50	0.91	4.63	6.25	30.68	184.07	9779	153.4	128.0
	8	RGG1508	14.45	22.45	7.75	1.23	4.50	0.91	4.63	6.25	30.68	245.43	9779	153.4	146.4
	10	RGG15010	16.45	26.45	7.75	1.23	4.50	0.91	4.63	6.25	30.68	306.79	9779	153.4	164.7
	12	RGG15012	18.45	30.45	7.75	1.23	4.50	0.91	4.63	6.25	30.68	368.14	9779	153.4	183.1
	13	RGG15013	19.45	32.45	7.75	1.23	4.50	0.91	4.63	6.25	30.68	398.82	9779	153.4	192.3
	14	RGG15014	20.45	34.45	7.75	1.23	4.50	0.91	4.63	6.25	30.68	429.50	9779	153.4	201.4
200	2	RGG2002	9.26	11.26	9.00	1.49	5.25	1.03	5.37	7.25	41.28	82.56	9690	206.4	136.1
	4	RGG2004	11.26	15.26	9.00	1.49	5.25	1.03	5.37	7.25	41.28	165.13	9690	206.4	161.0
	6	RGG2006	13.26	19.26	9.00	1.49	5.25	1.03	5.37	7.25	41.28	247.69	9690	206.4	185.9
	8	RGG2008	15.26	23.26	9.00	1.49	5.25	1.03	5.37	7.25	41.28	330.25	9690	206.4	210.9
	10	RGG20010	17.26	27.26	9.00	1.49	5.25	1.03	5.37	7.25	41.28	412.81	9690	206.4	235.8
	12	RGG20012	19.26	31.26	9.00	1.49	5.25	1.03	5.37	7.25	41.28	495.38	9690	206.4	260.7
	13	RGG20013	20.26	33.26	9.00	1.49	5.25	1.03	5.37	7.25	41.28	536.66	9690	206.4	273.2
	14	RGG20014	21.26	35.26	9.00	1.49	5.25	1.03	5.37	7.25	41.28	577.94	9690	206.4	285.6

Model Shown:
RGG Family



Features

HEAVY LIFT, GENERAL PURPOSE CYLINDER FOR TOUGH MAINTENANCE APPLICATIONS.

- Single-Acting, load return hydraulic cylinders, tonnages ranging from 250 - 600.
- Patented swivel cap provides concentrated load centering up to 5 degrees
- Sealing technology provides lubrication to reduce friction and wear.
- Floating piston design resists side loading conditions.
- “Power-Tech” nitro-carburization surface treatment inhibits corrosion and provides exceptional durability.
- Base mounting holes standard on all models (they are not maintained to port location).
- One high flow 3/8” NPTF female half coupler and removable carry strap w/ eyelets are included.
- Complies with ANSI / ASME B30.1 Safety Standards.

RGG Series Design Features

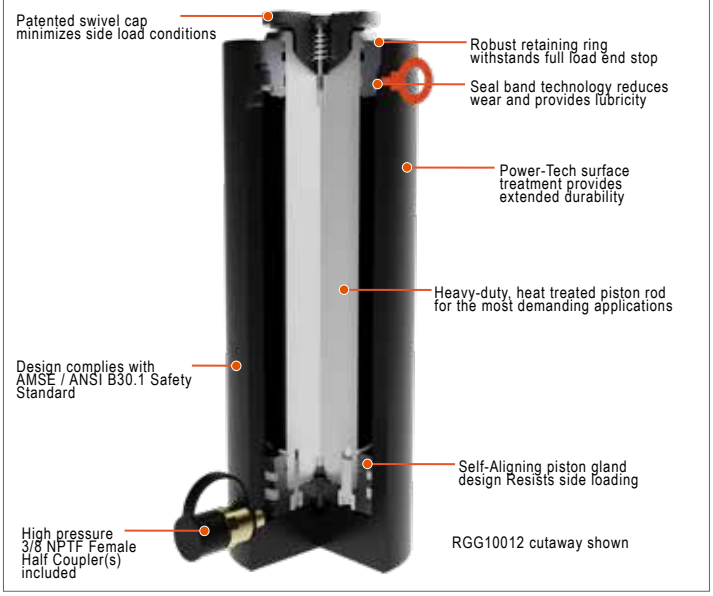

Technical Dimensions, Base Mounting Holes

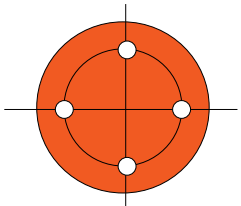

Four base mounting holes are 45° apart - standard on all models.

Tonnage	250	300	400	500	600
# of Base Mounting Holes	4	4	4	4	4
Base thread size	M24X3.0 - 6H	M24X3.0 - 6H	M30X3.5 - 6H	M30X3.5 - 6H	M33X2.0 - 6H
Base thread depth (in.)	1.457	1.457	1.8	1.5	1.95
Base Mounting Diameter (in.)	6.06	7.06	7.65	8.95	9.65
Orientation	Mounting hole orientation is not maintained to port location.				

Cylinder Selection



Power Team recommends using 80% of the rated capacity and stroke to maximize product performance and safety.

Custom stroke lengths are available, contact your local Power Team Sales Office for details and availability.

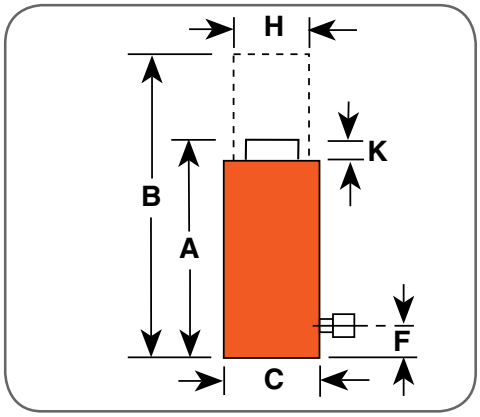

Ordering Information

Tonnage	Stroke	Order No.	A	B	C	F	H	K	Swivel Cap Dia.	Bore Dia.	Cyl. Eff. Area (Adv.)	Oil Cap.	Internal Press at Cap.	Tons at 10,000 PSI	Weight w/o Oil
			Ret. Height	Ext. Height	Out. Dia.	Base to Port	Piston Rod Dia.	Swivel Cap Protrusion							
(US Tons)	(in.)		(in.)	(in.)	(in.)	(in.)	(in.)	(in.)	(in.)	(in.)	(sq. in.)	(cu. in.)	(psi)	(US Tons)	(lbs.)
250	2	RGG2502	10.30	12.30	10.10	2.35	6.00	1.12	5.56	8.00	50.26	100.53	9,947	251.3	202.4
	4	RGG2504	12.30	16.30	10.10	2.35	6.00	1.12	5.56	8.00	50.26	201.06	9,947	251.3	235.4
	6	RGG2506	14.30	20.30	10.10	2.35	6.00	1.12	5.56	8.00	50.26	301.58	9,947	251.3	268.3
	8	RGG2508	16.30	24.30	10.10	2.35	6.00	1.12	5.56	8.00	50.26	402.11	9,947	251.3	301.3
	10	RGG25010	18.30	28.30	10.10	2.35	6.00	1.12	5.56	8.00	50.26	502.64	9,947	251.3	334.2
	12	RGG25012	20.30	32.30	10.10	2.35	6.00	1.12	5.56	8.00	50.26	603.17	9,947	251.3	367.2
	13	RGG25013	21.30	34.30	10.10	2.35	6.00	1.12	5.56	8.00	50.26	653.43	9,947	251.3	383.6
	14	RGG25014	22.30	36.30	10.10	2.35	6.00	1.12	5.56	8.00	50.26	703.70	9,947	251.3	400.1
300	2	RGG3002	10.74	12.74	11.40	2.48	6.50	1.28	6.66	9.00	63.62	127.23	9,432	318.1	266.5
	4	RGG3004	12.74	16.74	11.40	2.48	6.50	1.28	6.66	9.00	63.62	254.46	9,432	318.1	307.1
	6	RGG3006	14.74	20.74	11.40	2.48	6.50	1.28	6.66	9.00	63.62	381.69	9,432	318.1	347.7
	8	RGG3008	16.74	24.74	11.40	2.48	6.50	1.28	6.66	9.00	63.62	508.92	9,432	318.1	388.3
	10	RGG30010	18.74	28.74	11.40	2.48	6.50	1.28	6.66	9.00	63.62	636.15	9,432	318.1	428.9
	12	RGG30012	20.74	32.74	11.40	2.48	6.50	1.28	6.66	9.00	63.62	763.38	9,432	318.1	469.5
	13	RGG30013	21.74	34.74	11.40	2.48	6.50	1.28	6.66	9.00	63.62	827.00	9,432	318.1	489.9
	14	RGG30014	22.74	36.74	11.40	2.48	6.50	1.28	6.66	9.00	63.62	890.62	9,432	318.1	510.2
400	2	RGG4002	12.06	14.06	13.30	2.77	7.50	1.44	7.77	10.50	86.60	173.21	9,237	433.0	413.7
	4	RGG4004	14.06	18.06	13.30	2.77	7.50	1.44	7.77	10.50	86.60	346.42	9,237	433.0	468.4
	6	RGG4006	16.06	22.06	13.30	2.77	7.50	1.44	7.77	10.50	86.60	519.62	9,237	433.0	523.1
	8	RGG4008	18.06	26.06	13.30	2.77	7.50	1.44	7.77	10.50	86.60	692.83	9,237	433.0	577.8
	10	RGG40010	20.06	30.06	13.30	2.77	7.50	1.44	7.77	10.50	86.60	866.04	9,237	433.0	632.6
	12	RGG40012	22.06	34.06	13.30	2.77	7.50	1.44	7.77	10.50	86.60	1,039.25	9,237	433.0	687.3
	13	RGG40013	23.06	36.06	13.30	2.77	7.50	1.44	7.77	10.50	86.60	1,125.85	9,237	433.0	714.6
	14	RGG40014	24.06	38.06	13.30	2.77	7.50	1.44	7.77	10.50	86.60	1,212.46	9,237	433.0	742.0
500	2	RGG5002	12.28	14.28	14.75	2.90	8.00	1.55	8.51	11.50	103.87	207.73	9,628	519.3	512.7
	4	RGG5004	14.28	18.28	14.75	2.90	8.00	1.55	8.51	11.50	103.87	415.46	9,628	519.3	579.2
	6	RGG5006	16.28	22.28	14.75	2.90	8.00	1.55	8.51	11.50	103.87	623.20	9,628	519.3	645.7
	8	RGG5008	18.28	26.28	14.75	2.90	8.00	1.55	8.51	11.50	103.87	830.93	9,628	519.3	712.2
	10	RGG50010	20.28	30.28	14.75	2.90	8.00	1.55	8.51	11.50	103.87	1,038.66	9,628	519.3	778.7
	12	RGG50012	22.28	34.28	14.75	2.90	8.00	1.55	8.51	11.50	103.87	1,246.39	9,628	519.3	845.1
	13	RGG50013	23.28	36.28	14.75	2.90	8.00	1.55	8.51	11.50	103.87	1,350.26	9,628	519.3	878.4
	14	RGG50014	24.28	38.28	14.75	2.90	8.00	1.55	8.51	11.50	103.87	1,454.12	9,628	519.3	911.6
600	2	RGG6002	12.75	14.75	16.00	3.02	9.00	1.62	9.25	12.50	122.71	245.43	9,779	613.6	609.3
	4	RGG6004	14.75	18.75	16.00	3.02	9.00	1.62	9.25	12.50	122.71	490.86	9,779	613.6	689.7
	6	RGG6006	16.75	22.75	16.00	3.02	9.00	1.62	9.25	12.50	122.71	736.29	9,779	613.6	770.2
	8	RGG6008	18.75	26.75	16.00	3.02	9.00	1.62	9.25	12.50	122.71	981.72	9,779	613.6	850.7
	10	RGG60010	20.75	30.75	16.00	3.02	9.00	1.62	9.25	12.50	122.71	1,227.15	9,779	613.6	931.2
	12	RGG60012	22.75	34.75	16.00	3.02	9.00	1.62	9.25	12.50	122.71	1,472.58	9,779	613.6	1,011.7
	13	RGG60013	23.75	36.75	16.00	3.02	9.00	1.62	9.25	12.50	122.71	1,595.29	9,779	613.6	1,051.9
	14	RGG60014	24.75	38.75	16.00	3.02	9.00	1.62	9.25	12.50	122.71	1,718.01	9,779	613.6	1,092.2

Model Shown:
RDG Family



Features

HEAVY LIFT, GENERAL PURPOSE CYLINDER FOR TOUGH MRO APPLICATIONS.

- Double-Acting, hydraulic return cylinders, tonnages ranging from 55-200.
- Patented swivel cap provides concentrated load centering up to 5 degrees.
- Safety relief valve prevents over-pressurization of the retract circuit.
- Sealing technology provides lubrication to reduce friction and wear.
- "Power-Tech" nitro-carburization surface treatment inhibits corrosion and provides exceptional durability.
- Floating piston design resists side loading conditions.
- Base mounting holes standard on all models (they are not maintained to port location).
- Two high flow 3/8" NPTF female half coupler and removable carry strap w/ eyelets are included.
- Complies with ANSI / ASME B30.1 Safety Standards.

RDG Series is perfect choice for any heavy lift MRO application.



RDG Series Design Features

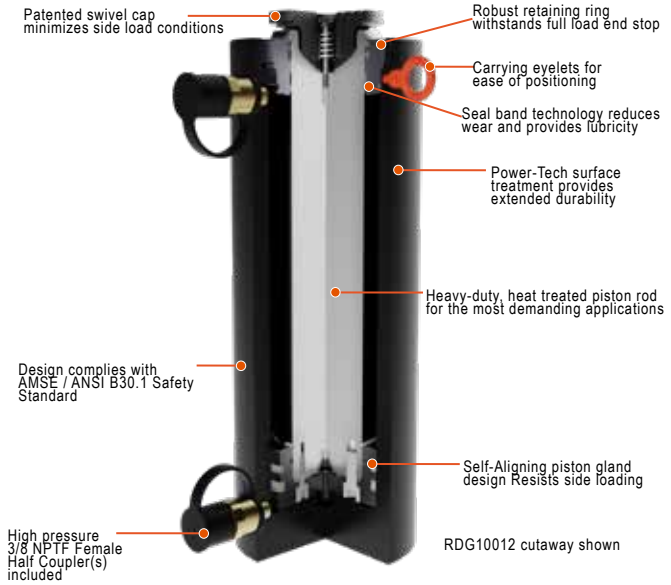

Technical Dimensions, Base Mounting Holes

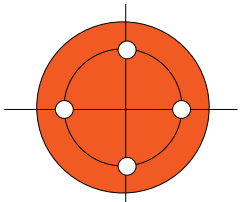

Four base mounting holes are 45° apart - standard on all models.

Tonnage	55	75	100	150	200
# of Base Mounting Holes	4	4	4	4	4
Base thread size	M12X1.75 - 6H	M12X1.75 - 6H	M16X1.5 - 6H	M16X1.5 - 6H	M20X1.5 - 6H
Base thread depth (in)	0.71	0.71	0.62	0.90	1.20
Base Mounting Diameter (in.)	3.03	3.66	4.00	5.12	5.72
Orientation	Mounting hole orientation is not maintained to port location.				

Cylinder Selection



Power Team recommends using 80% of the rated capacity and stroke to maximize product performance and safety.

Custom stroke lengths are available, contact your local Power Team Sales Office for details and availability.

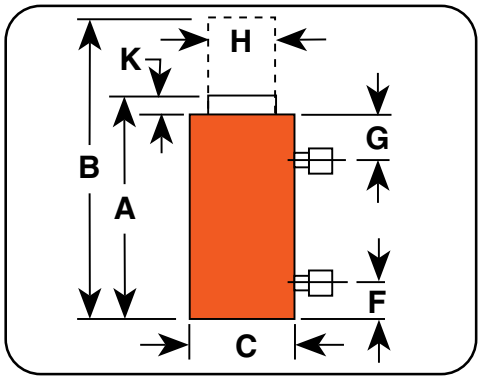

Ordering Information

Tonnage	Stroke	Order No.	A	B	C	F	G	H	K	Swivel Cap Dia.	Bore Dia.	Cyl. Eff. Area (Adv.)	Oil Cap. (Ext.)	Oil Cap. (Ret.)	Internal Press at Cap.	Tons at 10,000 PSI	Weight w/o Oil
			Ret. Height	Ext. Height	Out. Dia.	Base to Port	Top to Port	Piston Rod Dia.	Swivel Cap Protrusion								
(US Tons)	(in.)		(in.)	(in.)	(in.)	(in.)	(in.)	(in.)	(in.)	(in.)	(in.)	(sq. in.)	(cu. in.)	(cu. in.)	(psi)	(US Tons)	(lbs.)
55	2	RDG552	7.12	9.12	5.16	0.87	1.61	2.75	0.69	2.78	3.75	11.04	22.09	10.21	9,960	55.2	35.0
	4	RDG554	9.12	13.12	5.16	0.87	1.61	2.75	0.69	2.78	3.75	11.04	44.18	20.42	9,960	55.2	44.0
	6	RDG556	11.12	17.12	5.16	0.87	1.61	2.75	0.69	2.78	3.75	11.04	66.27	30.63	9,960	55.2	52.9
	8	RDG558	13.12	21.12	5.16	0.87	1.61	2.75	0.69	2.78	3.75	11.04	88.35	40.84	9,960	55.2	61.9
	10	RDG5510	15.12	25.12	5.16	0.87	1.61	2.75	0.69	2.78	3.75	11.04	110.44	51.05	9,960	55.2	70.8
	12	RDG5512	17.12	29.12	5.16	0.87	1.61	2.75	0.69	2.78	3.75	11.04	132.53	61.26	9,960	55.2	79.8
	13	RDG5513	18.12	31.12	5.16	0.87	1.61	2.75	0.69	2.78	3.75	11.04	143.58	66.36	9,960	55.2	84.3
	14	RDG5514	19.12	33.12	5.16	0.87	1.61	2.75	0.69	2.78	3.75	11.04	154.62	71.47	9,960	55.2	88.8
75	2	RDG752	7.44	9.44	5.78	0.90	1.76	3.13	0.76	3.24	4.38	15.03	30.07	14.73	9,978	75.2	45.4
	4	RDG754	9.44	13.44	5.78	0.90	1.76	3.13	0.76	3.24	4.38	15.03	60.13	29.45	9,978	75.2	56.1
	6	RDG756	11.44	17.44	5.78	0.90	1.76	3.13	0.76	3.24	4.38	15.03	90.20	44.18	9,978	75.2	66.8
	8	RDG758	13.44	21.44	5.78	0.90	1.76	3.13	0.76	3.24	4.38	15.03	120.26	58.90	9,978	75.2	77.5
	10	RDG7510	15.44	25.44	5.78	0.90	1.76	3.13	0.76	3.24	4.38	15.03	150.33	73.63	9,978	75.2	88.3
	12	RDG7512	17.44	29.44	5.78	0.90	1.76	3.13	0.76	3.24	4.38	15.03	180.39	88.35	9,978	75.2	99.0
	13	RDG7513	18.44	31.44	5.78	0.90	1.76	3.13	0.76	3.24	4.38	15.03	195.42	95.72	9,978	75.2	104.3
	14	RDG7514	19.44	33.44	5.78	0.90	1.76	3.13	0.76	3.24	4.38	15.03	210.46	103.08	9,978	75.2	109.7
100	2	RDG1002	7.79	9.79	6.53	0.94	1.85	3.75	0.92	3.87	5.13	20.63	41.26	19.17	9,695	103.1	59.3
	4	RDG1004	9.79	13.79	6.53	0.94	1.85	3.75	0.92	3.87	5.13	20.63	82.51	38.34	9,695	103.1	72.9
	6	RDG1006	11.79	17.79	6.53	0.94	1.85	3.75	0.92	3.87	5.13	20.63	123.77	57.50	9,695	103.1	86.4
	8	RDG1008	13.79	21.79	6.53	0.94	1.85	3.75	0.92	3.87	5.13	20.63	165.03	76.67	9,695	103.1	99.9
	10	RDG10010	15.79	25.79	6.53	0.94	1.85	3.75	0.92	3.87	5.13	20.63	206.28	95.84	9,695	103.1	113.4
	12	RDG10012	17.79	29.79	6.53	0.94	1.85	3.75	0.92	3.87	5.13	20.63	247.54	115.01	9,695	103.1	126.9
	13	RDG10013	18.79	31.79	6.53	0.94	1.85	3.75	0.92	3.87	5.13	20.63	268.17	124.59	9,695	103.1	133.7
	14	RDG10014	19.79	33.79	6.53	0.94	1.85	3.75	0.92	3.87	5.13	20.63	288.80	134.18	9,695	103.1	140.5
150	2	RDG1502	8.45	10.45	7.75	1.23	2.11	4.50	0.91	4.63	6.25	30.68	61.36	29.55	9,779	153.4	91.4
	4	RDG1504	10.45	14.45	7.75	1.23	2.11	4.50	0.91	4.63	6.25	30.68	122.71	59.10	9,779	153.4	109.8
	6	RDG1506	12.45	18.45	7.75	1.23	2.11	4.50	0.91	4.63	6.25	30.68	184.07	88.65	9,779	153.4	128.1
	8	RDG1508	14.45	22.45	7.75	1.23	2.11	4.50	0.91	4.63	6.25	30.68	245.43	118.20	9,779	153.4	146.5
	10	RDG15010	16.45	26.45	7.75	1.23	2.11	4.50	0.91	4.63	6.25	30.68	306.79	147.75	9,779	153.4	164.9
	12	RDG15012	18.45	30.45	7.75	1.23	2.11	4.50	0.91	4.63	6.25	30.68	368.14	177.30	9,779	153.4	183.2
	13	RDG15013	19.45	32.45	7.75	1.23	2.11	4.50	0.91	4.63	6.25	30.68	398.82	192.07	9,779	153.4	192.4
	14	RDG15014	20.45	34.45	7.75	1.23	2.11	4.50	0.91	4.63	6.25	30.68	429.50	206.85	9,779	153.4	201.6
200	2	RDG2002	9.26	11.26	9.00	1.49	2.25	5.25	1.03	5.37	7.25	41.28	82.56	39.27	9,690	206.4	136.3
	4	RDG2004	11.26	15.26	9.00	1.49	2.25	5.25	1.03	5.37	7.25	41.28	165.13	78.54	9,690	206.4	161.2
	6	RDG2006	13.26	19.26	9.00	1.49	2.25	5.25	1.03	5.37	7.25	41.28	247.69	117.81	9,690	206.4	186.1
	8	RDG2008	15.26	23.26	9.00	1.49	2.25	5.25	1.03	5.37	7.25	41.28	330.25	157.08	9,690	206.4	211.0
	10	RDG20010	17.26	27.26	9.00	1.49	2.25	5.25	1.03	5.37	7.25	41.28	412.81	196.34	9,690	206.4	236.0
	12	RDG20012	19.26	31.26	9.00	1.49	2.25	5.25	1.03	5.37	7.25	41.28	495.38	235.61	9,690	206.4	260.9
	13	RDG20013	20.26	33.26	9.00	1.49	2.25	5.25	1.03	5.37	7.25	41.28	536.66	255.25	9,690	206.4	273.4
	14	RDG20014	21.26	35.26	9.00	1.49	2.25	5.25	1.03	5.37	7.25	41.28	577.94	274.88	9,690	206.4	285.8

Model Shown:
RDG Family



Features

HEAVY LIFT, GENERAL PURPOSE CYLINDER FOR TOUGH MAINTENANCE APPLICATIONS.

- Double-Acting, hydraulic return cylinders, tonnages ranging from 250 - 600.
- Patented swivel cap provides concentrated load centering up to 5 degrees.
- Safety relief valve prevents over-pressurization of the retract circuit.
- Sealing technology provides lubrication to reduce friction and wear.
- “Power-Tech” nitro-carburization surface treatment inhibits corrosion and provides exceptional durability.
- Floating piston design resists side loading conditions.
- Two high flow 3/8” NPTF female half coupler and removable carry strap w/ eyelets are included.
- Base mounting holes standard on all models (they are not maintained to port location).
- Complies with ANSI / ASME B30.1 Safety Standards.

RDG Series is perfect for mining MRO application.



RDG Series Design Features

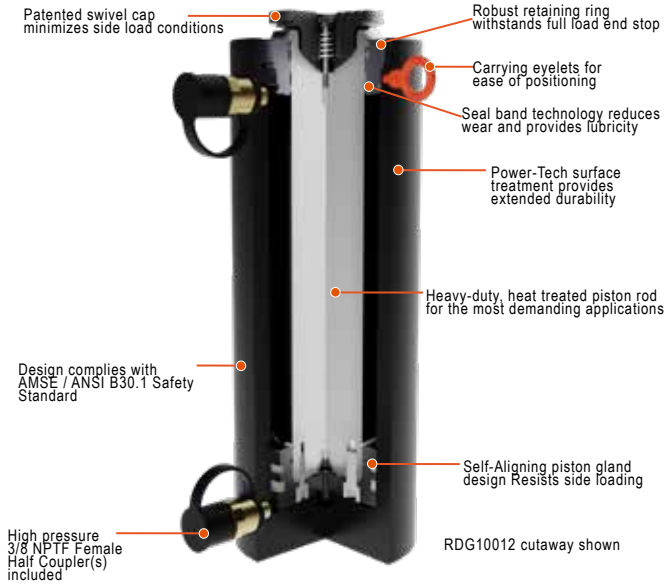

Technical Dimensions, Base Mounting Holes

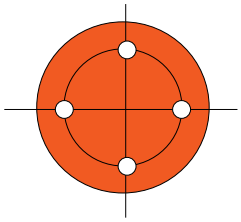

Four base mounting holes are 45° apart - standard on all models.

Tonnage	250	300	400	500	600
# of Base Mounting Holes	4	4	4	4	4
Base thread size	M24X3.0 - 6H	M24X3.0 - 6H	M30X3.5 - 6H	M30X3.5 - 6H	M33X2.0 - 6H
Base thread depth (in)	1.46	1.46	1.80	1.80	1.95
Base Mounting Diameter (in.)	6.06	7.06	7.65	8.95	9.65
Base Mounting Orientation	Mounting hole orientation is not maintained to port location.				

Cylinder Selection



Power Team recommends using 80% of the rated capacity and stroke to maximize product performance and safety.

Custom stroke lengths are available, contact your local Power Team Sales Office for details and availability.

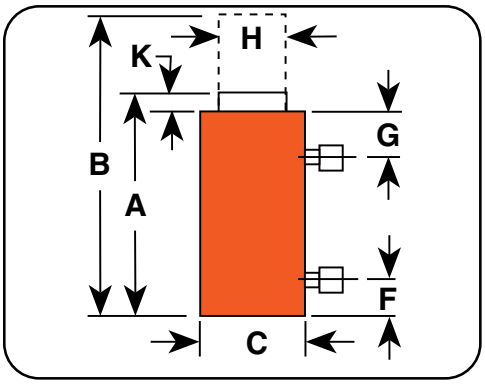

Ordering Information

Tonnage	Stroke	Order No.	A	B	C	F	G	H	K	Swivel Cap Dia.	Bore Dia.	Cyl. Eff. Area (Adv.)	Oil Cap. (Ext.)	Oil Cap. (Ret.)	Internal Press at Cap.	Tons at 10,000 PSI	Weight w/o Oil
			Ret. Height	Ext. Height	Out. Dia.	Base to Port	Top to Port	Piston Rod Dia.	Swivel Cap Protrusion								
(US Tons)	(in.)		(in.)	(in.)	(in.)	(in.)	(in.)	(in.)	(in.)	(in.)	(in.)	(sq. in.)	(cu. in.)	(cu. in.)	(psi)	(US Tons)	(lbs.)
250	2	RDG2502	10.30	12.30	10.10	2.35	2.35	6.00	1.12	5.56	8.00	50.26	100.53	43.98	9,947	251.3	202.6
	4	RDG2504	12.30	16.30	10.10	2.35	2.35	6.00	1.12	5.56	8.00	50.26	201.06	87.96	9,947	251.3	235.6
	6	RDG2506	14.30	20.30	10.10	2.35	2.35	6.00	1.12	5.56	8.00	50.26	301.58	131.94	9,947	251.3	268.5
	8	RDG2508	16.30	24.30	10.10	2.35	2.35	6.00	1.12	5.56	8.00	50.26	402.11	175.92	9,947	251.3	301.5
	10	RDG25010	18.30	28.30	10.10	2.35	2.35	6.00	1.12	5.56	8.00	50.26	502.64	219.91	9,947	251.3	334.4
	12	RDG25012	20.30	32.30	10.10	2.35	2.35	6.00	1.12	5.56	8.00	50.26	603.17	263.89	9,947	251.3	367.3
	13	RDG25013	21.30	34.30	10.10	2.35	2.35	6.00	1.12	5.56	8.00	50.26	653.43	285.88	9,947	251.3	383.8
	14	RDG25014	22.30	36.30	10.10	2.35	2.35	6.00	1.12	5.56	8.00	50.26	703.70	307.87	9,947	251.3	400.3
300	2	RDG3002	10.74	12.74	11.40	2.48	2.48	6.50	1.28	6.66	9.00	63.62	127.23	60.87	9,432	318.1	266.7
	4	RDG3004	12.74	16.74	11.40	2.48	2.48	6.50	1.28	6.66	9.00	63.62	254.46	121.73	9,432	318.1	307.3
	6	RDG3006	14.74	20.74	11.40	2.48	2.48	6.50	1.28	6.66	9.00	63.62	381.69	182.60	9,432	318.1	347.9
	8	RDG3008	16.74	24.74	11.40	2.48	2.48	6.50	1.28	6.66	9.00	63.62	508.92	243.47	9,432	318.1	388.5
	10	RDG30010	18.74	28.74	11.40	2.48	2.48	6.50	1.28	6.66	9.00	63.62	636.15	304.33	9,432	318.1	429.1
	12	RDG30012	20.74	32.74	11.40	2.48	2.48	6.50	1.28	6.66	9.00	63.62	763.38	365.20	9,432	318.1	469.7
	13	RDG30013	21.74	34.74	11.40	2.48	2.48	6.50	1.28	6.66	9.00	63.62	827.00	395.63	9,432	318.1	490.0
	14	RDG30014	22.74	36.74	11.40	2.48	2.48	6.50	1.28	6.66	9.00	63.62	890.62	426.07	9,432	318.1	510.3
400	2	RDG4002	12.06	14.06	13.30	2.77	2.77	7.50	1.44	7.77	10.50	86.60	173.21	84.85	9,237	433.0	413.9
	4	RDG4004	14.06	18.06	13.30	2.77	2.77	7.50	1.44	7.77	10.50	86.60	346.42	169.71	9,237	433.0	468.6
	6	RDG4006	16.06	22.06	13.30	2.77	2.77	7.50	1.44	7.77	10.50	86.60	519.62	254.56	9,237	433.0	523.3
	8	RDG4008	18.06	26.06	13.30	2.77	2.77	7.50	1.44	7.77	10.50	86.60	692.83	339.41	9,237	433.0	578.0
	10	RDG40010	20.06	30.06	13.30	2.77	2.77	7.50	1.44	7.77	10.50	86.60	866.04	424.27	9,237	433.0	632.7
	12	RDG40012	22.06	34.06	13.30	2.77	2.77	7.50	1.44	7.77	10.50	86.60	1039.25	509.12	9,237	433.0	687.5
	13	RDG40013	23.06	36.06	13.30	2.77	2.77	7.50	1.44	7.77	10.50	86.60	1125.85	551.55	9,237	433.0	714.8
	14	RDG40014	24.06	38.06	13.30	2.77	2.77	7.50	1.44	7.77	10.50	86.60	1212.46	593.97	9,237	433.0	742.2
500	2	RDG5002	12.28	14.28	14.75	2.90	2.90	8.00	1.55	8.51	11.50	103.87	207.73	107.20	9,628	519.3	512.9
	4	RDG5004	14.28	18.28	14.75	2.90	2.90	8.00	1.55	8.51	11.50	103.87	415.46	214.41	9,628	519.3	579.4
	6	RDG5006	16.28	22.28	14.75	2.90	2.90	8.00	1.55	8.51	11.50	103.87	623.20	321.61	9,628	519.3	645.9
	8	RDG5008	18.28	26.28	14.75	2.90	2.90	8.00	1.55	8.51	11.50	103.87	830.93	428.81	9,628	519.3	712.4
	10	RDG50010	20.28	30.28	14.75	2.90	2.90	8.00	1.55	8.51	11.50	103.87	1038.66	536.02	9,628	519.3	778.9
	12	RDG50012	22.28	34.28	14.75	2.90	2.90	8.00	1.55	8.51	11.50	103.87	1246.39	643.22	9,628	519.3	845.3
	13	RDG50013	23.28	36.28	14.75	2.90	2.90	8.00	1.55	8.51	11.50	103.87	1350.26	696.82	9,628	519.3	878.6
	14	RDG50014	24.28	38.28	14.75	2.90	2.90	8.00	1.55	8.51	11.50	103.87	1454.12	750.43	9,628	519.3	911.8
600	2	RDG6002	12.75	14.75	16.00	3.02	3.02	9.00	1.62	9.25	12.50	122.71	245.43	118.20	9,779	613.6	609.5
	4	RDG6004	14.75	18.75	16.00	3.02	3.02	9.00	1.62	9.25	12.50	122.71	490.86	236.40	9,779	613.6	690.0
	6	RDG6006	16.75	22.75	16.00	3.02	3.02	9.00	1.62	9.25	12.50	122.71	736.29	354.60	9,779	613.6	770.5
	8	RDG6008	18.75	26.75	16.00	3.02	3.02	9.00	1.62	9.25	12.50	122.71	981.72	472.80	9,779	613.6	850.9
	10	RDG60010	20.75	30.75	16.00	3.02	3.02	9.00	1.62	9.25	12.50	122.71	1227.15	590.99	9,779	613.6	931.4
	12	RDG60012	22.75	34.75	16.00	3.02	3.02	9.00	1.62	9.25	12.50	122.71	1472.58	709.19	9,779	613.6	1,011.9
	13	RDG60013	23.75	36.75	16.00	3.02	3.02	9.00	1.62	9.25	12.50	122.71	1595.29	768.29	9,779	613.6	1,052.1
	14	RDG60014	24.75	38.75	16.00	3.02	3.02	9.00	1.62	9.25	12.50	122.71	1718.01	827.39	9,779	613.6	1,092.4

Model Shown:

RD10013, RD556, RD300



Features

HIGH TONNAGE PREMIUM DESIGN FOR HIGH CYCLE LIFE.

- Perfect for bridge lifting, building reconstruction, shipyard, utility and mining equipment maintenance.
- Aluminum bronze overlay bearings provide long life.
- Chrome plated piston rod resists corrosion.
- Rod and collar threads are designed to withstand full tonnage.
- Grooved ring pattern in load cap helps guard against load slippage.
- Each cylinder has two 9796 3/8" NPTF female half couplers.
- Built-in safety relief valve prevents over-pressurization of the retract circuit.
- Feature mounting holes and collar threads.
- Complies with ANSI / ASME B30.1 Safety Standards.

RD Series Design Features

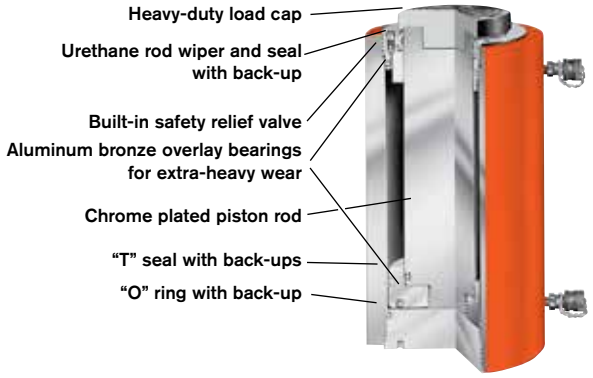

RD Series Performance

The table at right gives you an idea of what to expect when coupling RD series cylinders to a Power Team pump. Actual performance will vary according to job conditions.

Pump	Cylinder	Time to Extend Cylinder 1"	
		100 psi	10,000 psi
PE55	RD55	1.0 sec.	12.0 sec.
	RD100	1.8 sec.	22.5 sec.
	RD200	3.5 sec.	45.0 sec.
	RD400	7.2 sec.	85.0 sec.
PQ120 Series	RD200	3.4 sec.	20.6 sec.
	RD300	4.9 sec.	30.0 sec.
	RD400	6.4 sec.	39.0 sec.
	RD500	8.1 sec.	49.5 sec.
PE400 Series	RD300	3.0 sec.	8.5 sec.
	RD400	3.9 sec.	11.1 sec.
	RD500	4.9 sec.	14.1 sec.

Four special order 500 ton, 24" stroke cylinders used in a swaging press for crimping 3 1/2" wire rope.



Technical Dimensions, Base Mounting Holes

Cylinder Tonnage	10	25	55	80	100	150	200	300	400	500
# of Holes	2	4	4	4	4		4	4	4	6
Thread Size	3/8"-16	1/2"-13	5/8"-11	5/8"-11	3/4"-10	1"-8	1 1/4"-7	1 1/4"-7	1 1/2"-12	1 3/8"-12
Thread Depth (in)	0.63	0.75	0.88	0.88	1.00	1.00	1.25	1.75	1.88	2.00
Bolt Circle Diameter (in.)	2.00	2.75	3.50	4.50	5.50	6.00	6.50	6.25	7.25	8.00
Orientation*	90°	45°	45°	45°	45° †	45°	45°	Random	Random	Random

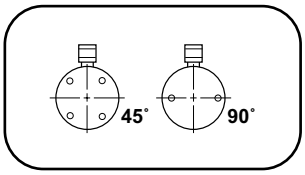

NOTE: Base mounting holes are standard on all RD cylinders. *Orientation of base mounting holes to coupler.
† Excludes RD10020.

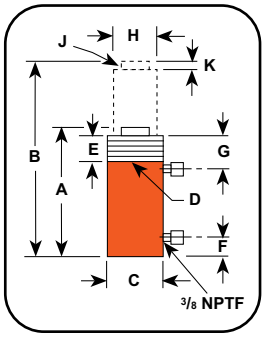

Optional Swivel Load Caps Ordering Info

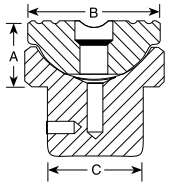

Cylinder Tonnage	Swivel Cap Order No.	Wt. (lbs.)	A (in.)	B (in.)	C (in.)
10	350144	0.8	0.88	1.44	0.86
25	350145	1.3	1.13	2.13	1.44
55	351325	4.2	2.44	2.50	1.55
100	351324	11.2	2.95	3.75	2.66
150/200	351334	12.8	2.63	4.38	3.06

Ordering Information

Cyl. Cap. (tons) Push	Cyl. Cap. (tons) Pull	Stroke (in.)	Order No.	Oil Cap. (cu.in) Push	Oil Cap. (cu.in) Pull	A Retracted Height (in.)	B Extended Height (in.)	C Outside Dia. (in.)	D Collar Thread Size (in.)	E Thread Length Thread (in.)	F Base to Port (in.)	G Cyl. Piston Top to Port (in.)	H Piston Rod Dia. (in.)	J Rod Int. Thread & Depth (in.)	K Piston Rod Protrusion (in.)	Load Cap. Dia. (in.)	Bore Dia. (in.)	Cylinder Effective Area (sq. in.) Push	Cylinder Effective Area (sq. in.) Pull	Int. Press. at Cap. (psi) Push	Int. Press. at Cap. (psi) Pull	Tons at 10,000 (tons) Push	Tons at 10,000 (tons) Pull	Prod. Wt. (lbs.)
10	4	6.25	RD106	13.9	5.5	11.69	17.94	3.00	2 3/4 - 12	1.63	1.00	2.50	0.94	1-8 x 1	0.25	1.38	1.69	2.23	0.88	8,943	9,055	11.2	4.4	22.0
	4	10.00	RD1010	22.3	8.8	15.69	25.69	3.00	2 3/4 - 12	1.63	1.00	2.50	0.94	1-8 x 1	0.25	1.38	1.69	2.23	0.88	8,943	9,055	11.2	4.4	28.0
25	8	6.25	RD256	32.2	10.1	12.38	18.63	4.00	4 - 12	1.63	1.00	2.50	2.13	1 1/2-16 x 1	0.38	2.13	2.56	5.15	1.61	9,695	9,934	25.8	8.0	39.8
	8	14.25	RD2514	73.5	22.9	20.38	34.63	4.00	4 - 12	1.63	1.00	2.50	2.13	1 1/2-16 x 1	0.38	2.13	2.56	5.15	1.61	9,695	9,934	25.8	8.0	65.0
55	28	6.25	RD556	69.0	35.2	12.97	19.22	5.00	5 - 12	1.63	1.31	2.50	2.63	1 11/16-8 x 1 3/16	0.63	2.63	3.75	11.04	5.63	9,959	9,941	55.2	28.2	61.4
	28	13.13	RD5513	144.9	73.9	19.84	32.97	5.00	5 - 12	1.63	1.29	2.50	2.63	1 11/16-8 x 1 3/16	0.63	2.63	3.75	11.04	5.63	9,959	9,941	55.2	28.2	90.0
	28	18.13	RD5518	200.0	102.0	25.88	44.00	5.00	5 - 12	1.63	1.28	2.50	2.63	1 11/16-8 x 1 3/16	0.63	2.63	3.75	11.04	5.63	9,959	9,941	55.2	28.2	142.0
80	44	13.13	RD8013	208.6	115.9	20.38	33.50	5.75	5 3/4 - 12	1.63	1.50	2.50	3.00	2-4 1/2 x 1 1/2	0.56	2.88	4.50	15.9	8.84	10,060	9,954	79.5	44.2	118.0
100	44	6.63	RD1006	136.7	58.5	13.78	20.41	6.88	6 7/8 - 12	1.63	1.50	2.50	3.88	2 3/4-12 x 1 5/32	0.63	3.88	5.13	20.63	8.84	9,695	9,959	103.1	44.2	126.0
	44	13.13	RD10013	270.7	116.0	20.28	33.41	6.88	6 7/8 - 12	1.63	1.50	2.50	3.88	2 3/4-12 x 1 5/32	0.63	3.88	5.13	20.63	8.84	9,695	9,959	103.1	44.2	181.0
	44	20.13	RD10020	415.2	178.0	30.50	50.63	6.88	6 7/8 - 12	1.63	2.78	2.50	3.88	2 3/4-12 x 1 5/32	0.63	3.88	5.13	20.63	8.84	9,695	9,959	103.1	44.2	260.0
150	73	6.63	RD1506	203.3	97.9	14.88	21.50	8.25	8 1/4 - 12	1.63	2.00	2.50	4.50	3 1/4-8 x 1 1/2	0.81	4.50	6.25	30.68	14.78	9,779	9,880	153.4	73.8	188.0
	73	13.13	RD15013	402.7	193.9	21.38	34.50	8.25	8 1/4 - 12	1.63	2.00	2.50	4.50	3 1/4-8 x 1 1/2	0.81	4.50	6.25	30.68	14.78	9,779	9,880	153. 4	73.8	272.0
	73	18.13	RD15018	556.8	267.8	26.53	44.66	8.25	8 1/4 - 12	1.63	2.00	2.50	4.50	3 1/4-8 x 1 1/2	0.75	4.50	6.25	30.68	14.78	9,779	9,880	153.4	73.8	376.0
200	113	6.63	RD2006	273.5	149.8	16.00	22.63	9.50	9 1/2 - 12	1.63	2.50	2.69	4.88	3 1/4-8 x 2 1/4	1.06	4.50	7.25	41.28	22.62	9,689	9,992	206.4	113 .1	262.0
	113	13.13	RD20013	541.8	296.9	22.50	35.63	9.50	9 1/2 - 12	1.63	2.33	2.69	4.88	3 1/4-8 x 2 1/4	1.06	4.50	7.25	41.28	22.62	9,689	9,992	206.4	113.1	356.0
	113	18.13	RD20018	748.2	409.9	28.50	46.63	9.50	9 1/2 - 12	1.63	2.25	2.69	4.88	3 1/4-8 x 2 1/4	1.06	4.50	7.25	41.28	22.62	9,689	9,992	206.4	113.1	442.0
300	147	6.00	RD3006	361.0	177.0	17.28	23.28	10.75	10 1/2 - 12	2.38	3.38	3.38	6.25	2 1/2-12 x 3 1/4	1.13	6.88	8.75	60.13	29.45	9,978	10,000	300.7	147.3	380.0
	147	13.00	RD30013	782.0	383.0	24.81	37.81	10.75	10 1/2 - 12	2.38	3.38	3.38	6.25	2 1/2-12 x 3 1/4	1.13	6.88	8.75	60.13	29.45	9,978	10,000	300.7	147.3	654.0
400	186	6.00	RD4006	471.0	247.0	19.28	25.28	12.63	12 1/2 - 8	2.75	3.84	3.84	7.25	3-12 x 3 3/4	1.25	7.81	10.00	78.54	37.26	10,185	10,000	392.7	186.3	585.0
	186	13.00	RD40013	1021.0	536.0	26.28	39.28	12.63	12 1/2 - 8	2.75	3.82	3.84	7.25	3-12 x 3 3/4	1.25	7.81	10.00	78.54	37.26	10,185	10,000	392.7	186.3	770.0
500	245	6.00	RD5006	596.0	295.0	20.56	26.56	14.75	14 3/4 - 8	3.13	4.16	4.16	8.00	3 1/4-12 x 4 1/4	1.5	8.50	11.25	99.40	49.14	10,060	10,000	497.0	245.6	819.0
	245	13.00	RD50013	1292.0	639.0	27.56	40.56	14.75	14 3/4 - 8	3.13	4.16	4.16	8.00	3 1/4-12 x 4 1/4	1.5	8.50	11.25	99.40	49.14	10,060	10,000	497.0	245.6	1092.0

Model Shown:
R2802C



Features

HIGH-TONNAGE, LOW CYCLE APPLICATION, GRAVITY RETURN.

- Visible indicator band alerts when stroke limit is reached. Overflow port (weep hole) stroke limiter prevents piston from being overextended.
- Alloy heat treated piston and body for reliability and strength.
- Plated piston rod increases corrosion resistance and gives superior bearing support.
- Optional swivel load caps reduce the effects of off-center loading tilts up to 5 degrees. Radial grooves on top of cap reduce load slippage.

Technical Dimensions

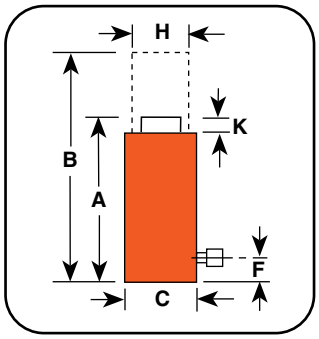

Optional Swivel Load Caps Ordering Info

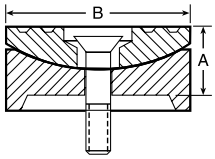

Cylinder Tonnage	Swivel Cap Order No.	Wt. (lbs.)	A (in.)	B (in.)
150-200	420867	8.8	1.50	5.13
280	420868	13.5	1.75	5.88
355	420869	37.0	2.75	7.69
430	420870	52.0	3.13	8.88
565	420871	78.0	3.63	9.88

Reduce the effects of off-center loading. Tilt up to 5 degrees. Radial grooves on top of cap reduce load slippage. Notch across face of each cap helps keep loads having a protruding or round shaped centered.

Ordering Information

Cyl. Cap. (tons)	Stroke (in.)	Order No.	Oil Cap. (cu. in.)	A Retracted Height (in.)	B Extended Height (in.)	C Outside Dia. (in.)	F Base to Port (in.)	H Piston Rod Dia. (in.)	K Piston Rod Protrusion (in.)	Bore Dia. (in.)	Cylinder Effective Area (sq. in.)	Int. Press. at Cap. (psi)	Tons at 10,000 (tons)	Prod. Wt. (lbs.)
55	2	R552C	22.1	4.94	6.94	5.00	1.00	3.75	0.13	3.75	11.04	9,960	55.2	27
	6	R556C	66.3	8.94	14.94	5.00	1.00	3.75	0.13	3.75	11.04	9,960	55.2	50
	10	R5510C	110.4	12.94	22.94	5.00	1.00	3.75	0.13	3.75	11.04	9,960	55.2	72
100	2	R1002C	41.3	5.50	7.50	6.50	1.00	5.13	0.13	5.13	20.63	9,695	103.2	52
	6	R1006C	123.8	9.50	15.50	6.50	1.00	5.13	0.13	5.13	20.63	9,695	103.2	89
150	2	R1502C	61.4	6.38	8.38	8.06	1.25	6.25	0.13	6.25	30.68	9,778	153.4	92
	6	R1506C	184.1	10.38	16.38	8.06	1.25	6.25	0.13	6.25	30.68	9,778	153.4	151
	10	R15010C	306.8	14.38	24.38	8.06	1.25	6.25	0.13	6.25	30.68	9,778	153.4	210
200	2	R2002C	82.6	7.50	9.50	9.25	1.63	7.25	0.13	7.25	41.28	9,690	206.4	145
	6	R2006C	247.7	11.50	17.50	9.25	1.63	7.25	0.13	7.25	41.28	9,690	206.4	221
280	2	R2802C	113.5	7.50	9.50	10.25	1.63	8.50	0.13	8.50	56.74	9,870	283.7	201
	6	R2806C	340.4	11.50	17.50	10.88	1.63	8.50	0.13	8.50	56.74	9,870	283.7	300
355	2	R3552C	141.8	9.13	11.13	11.75	2.13	9.50	0.13	9.50	70.88	10,017	354.4	302
	6	R3556C	425.3	13.13	19.13	11.75	2.13	9.50	0.13	9.50	70.88	10,017	354.4	434
	10	R35510C	708.8	17.13	27.13	11.75	2.13	9.50	0.13	9.50	70.88	10,017	354.4	565
430	2	R4302C	173.2	10.38	12.38	13.00	2.50	10.50	0.13	10.50	86.59	9,932	433.0	440
	6	R4306C	519.5	14.38	20.38	13.00	2.50	10.50	0.13	10.50	86.59	9,932	433.0	609
565	2	R5652C	226.2	11.50	13.50	14.88	2.75	12.00	0.13	12.00	113.10	9,991	565.5	638
	6	R5656C	678.6	15.50	21.50	14.88	2.75	12.00	0.13	12.00	113.10	9,991	565.5	858
	10	R56510C	1131	19.50	29.50	14.88	2.75	12.00	0.13	12.00	113.10	9,991	565.5	1078

Model Shown:

R2806D, R1502D



Features

HIGH-TONNAGE, LOW CYCLE, HYDRAULIC RETURN CYLINDERS.

- Cylinders come standard with swivel caps to reduce the effects of off-center loading.
- Cylinders may be “dead-ended” without damage.
- Hard chrome plated, heat treated piston rod reduces wear on piston and gland nut.
- Built-in safety relief valve prevents over-pressurization of the retraction circuit.
- Each cylinder has two 9796 3⁄8" NPTF female half couplers.

Technical Dimensions

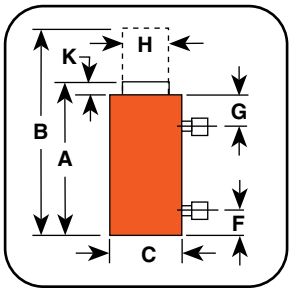

Hydraulic Hoses

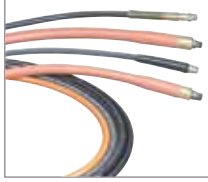

Heavy-duty and thermo plastic hydraulic hoses to meet your requirements and safety factor.

Refer to the accessories section for details.

Ordering Information

Cyl. Cap. (tons)	Stroke (in.)	Order No.	Oil Cap. (cu. in.) Push	Oil Cap. (cu. in.) Return	A Retracted Height (in.)	B Extended Height (in.)	C Outside Dia. (in.)	F Base to Port (in.)	G Cylinder Top to Port (in.)	H Piston Rod Dia. (in.)	K Piston Rod Protrusion (in.)	Bore Dia. (in.)	Cylinder Effective Area (sq. in.)	Int. Press. at Cap. (psi)	Tons at 10,000 (tons)	Prod. Wt. (lbs.)
100	2	R1002D	41.2	19.2	6.64	8.64	6.50	1.00	2.20	3.75	0.28	5.13	20.6	9,695	103.0	54
	6	R1006D	123.6	57.6	10.64	16.64	6.50	1.00	2.20	3.75	0.28	5.13	20.6	9,695	103.0	81
	10	R10010D	206.0	96.0	14.64	24.64	6.50	1.00	2.20	3.75	0.28	5.13	20.6	9,695	103.0	108
150	2	R1502D	61.4	29.6	7.44	9.44	8.06	1.25	2.25	4.50	0.30	6.25	30.7	9,778	153.4	95
	6	R1506D	184.2	88.8	11.44	17.44	8.06	1.25	2.25	4.50	0.30	6.25	30.7	9,778	153.4	136
200	2	R2002D	82.6	39.2	8.14	10.14	9.25	1.63	2.31	5.25	0.34	7.25	41.3	9,690	206.4	136
	6	R2006D	247.8	117.6	12.14	18.14	9.25	1.63	2.31	5.25	0.34	7.25	41.3	9,690	206.4	187
	10	R20010D	413.0	196.0	16.14	26.14	9.25	1.63	2.31	5.25	0.34	7.25	41.3	9,690	206.4	239
280	2	R2802D	113.4	47.2	9.20	11.20	10.88	1.88	2.58	6.50	0.41	8.50	56.7	9,870	283.7	219
	6	R2806D	340.2	141.6	13.20	19.20	10.88	1.88	2.58	6.50	0.41	8.50	56.7	9,870	283.7	297
	10	R28010D	567.0	236.0	17.20	27.20	10.88	1.88	2.58	6.50	0.41	8.50	56.7	9,870	283.7	376
355	2	R3552D	141.8	47.4	2.63	13.38	11.75	2.13	2.75	7.75	0.44	9.50	70.9	10,017	354.4	324
	6	R3556D	425.4	142.2	15.38	21.38	11.75	2.13	2.75	7.75	0.44	9.50	70.9	10,017	354.4	421
430	2	R4302D	173.2	59.6	12.31	14.31	13.00	2.50	2.95	8.50	0.47	10.50	86.6	9,932	433.0	439
	6	R4306D	519.6	178.8	16.31	22.31	13.00	2.50	2.95	8.50	0.47	10.50	86.6	9,932	433.0	558
	10	R43010D	866.0	298.0	20.31	30.31	13.00	2.50	2.95	8.50	0.47	10.50	86.6	9,932	433.0	673
565	2	R5652D	226.2	76.8	13.59	15.59	14.88	2.75	3.20	9.75	0.55	12.00	113.1	9,991	565.5	619
	6	R5656D	678.6	230.4	17.59	23.59	14.88	2.75	3.20	9.75	0.55	12.00	113.1	9,991	565.5	772
	10	R56510D	1131.0	384.0	21.59	31.59	14.88	2.75	3.20	9.75	0.55	12.00	113.1	9,991	565.5	926

Model Shown:
RGL552



Note: When selecting a hydraulic cylinder(s) capacity and stroke, Power Team recommends that you size to the 80% Rule. This will ensure additional safety factor and extend the product performance over time.

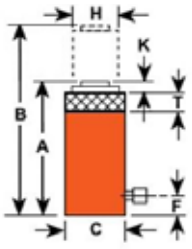

Features

- Positive mechanical locking collar safely supports load for extended periods of time with hydraulic pressure released.
- Patented swivel cap provides concentrated load centering up to 5 degrees.
- Sealing technology provides rod lubrication to reduce friction and wear.
- Robust retaining ring withstands full load end stop and conforms with ANSI B30.1 standards. Power-Tech nitro-carburization surface treatment inhibits corrosion and provides exceptional durability.
- Power-Tech nitro-carburization surface treatment inhibits corrosion and provides exceptional durability.

Base Mounting Holes



Four base mounting holes are 45° apart - standard on all models.

Tonnage	# of Base Mounting Holes	Base Thread Size	Base Thread Depth (in.)	Base Mounting Diameter (in.)	Orientation
55	4	M12X1.75 - 6H	0.709	3.03	Mounting hole orientation is not maintained to port location
75	4	M12X1.75 - 6H	0.709	3.66	
100	4	M16x1.5 - 6H	0.62	4.00	
150	4	M16x1.5 - 6H	0.9	5.12	
200	4	M20X1.5 - 6H	1.2	5.72	

Ordering Information

Tonnage	Stroke	Order No.	A	B	C	F	H	K	T	Bore Dia.	Cyl. Eff. Area (Adv.)	Oil Cap.	Internal Press at Cap.	Weight w/o Oil
			Ret. Height	Ext. Height	Out. Dia.	Base to Port	Piston Rod Dia.	Swivel Cap Protrusion	Nut Thickness					
(tons)	(in.)		(in.)	(in.)	(in.)	(in.)	(in.)	(in.)	(in.)	(in.)	(sq. in.)	(cu. in.)	(psi)	(lbs.)
55	2	RGL552	7.78	9.78	5.16	0.87	2.75	0.53	0.82	3.75	11.04	22.09	9,960	38.8
	4	RGL554	9.78	13.78	5.16	0.87	2.75	0.53	1.82	3.75	11.04	44.18	9,960	47.6
	6	RGL556	11.78	17.78	5.16	0.87	2.75	0.53	2.82	3.75	11.04	66.27	9,960	56.3
	8	RGL558	13.78	21.78	5.16	0.87	2.75	0.53	3.82	3.75	11.04	88.35	9,960	65.1
	10	RGL5510	15.78	25.78	5.16	0.87	2.75	0.53	4.82	3.75	11.04	110.44	9,960	73.8
	12	RGL5512	17.78	29.78	5.16	0.87	2.75	0.53	5.82	3.75	11.04	132.53	9,960	82.5
75	2	RGL752	8.22	10.22	5.78	0.90	3.13	0.56	0.98	4.38	15.03	30.07	9,978	51.3
	4	RGL754	10.22	14.22	5.78	0.90	3.13	0.56	1.98	4.38	15.03	60.13	9,978	61.7
	6	RGL756	12.22	18.22	5.78	0.90	3.13	0.56	2.98	4.38	15.03	90.20	9,978	72.2
	8	RGL758	14.22	22.22	5.78	0.90	3.13	0.56	3.98	4.38	15.03	120.26	9,978	82.7
	10	RGL7510	16.22	26.22	5.78	0.90	3.13	0.56	4.98	4.38	15.03	150.33	9,978	93.2
	12	RGL7512	18.22	30.22	5.78	0.90	3.13	0.56	5.98	4.38	15.03	180.39	9,978	103.6
100	2	RGL1002	8.69	10.69	6.53	0.94	3.75	0.74	1.08	5.13	20.63	41.26	9,695	68.2
	4	RGL1004	10.69	14.69	6.53	0.94	3.75	0.74	2.08	5.13	20.63	82.51	9,695	81.5
	6	RGL1006	12.69	18.69	6.53	0.94	3.75	0.74	3.08	5.13	20.63	123.77	9,695	94.7
	8	RGL1008	14.69	22.69	6.53	0.94	3.75	0.74	4.08	5.13	20.63	165.03	9,695	107.9
	10	RGL10010	16.69	26.69	6.53	0.94	3.75	0.74	5.08	5.13	20.63	206.28	9,695	121.1
	12	RGL10012	18.69	30.69	6.53	0.94	3.75	0.74	6.08	5.13	20.63	247.54	9,695	134.3
150	2	RGL1502	9.60	11.60	7.75	1.23	4.50	0.72	1.34	6.25	30.68	61.36	9,779	107.5
	4	RGL1504	11.60	15.60	7.75	1.23	4.50	0.72	2.34	6.25	30.68	122.71	9,779	125.5
	6	RGL1506	13.60	19.60	7.75	1.23	4.50	0.72	3.34	6.25	30.68	184.07	9,779	143.4
	8	RGL1508	15.60	23.60	7.75	1.23	4.50	0.72	4.34	6.25	30.68	245.43	9,779	161.4
	10	RGL15010	17.60	27.60	7.75	1.23	4.50	0.72	5.34	6.25	30.68	306.79	9,779	179.4
	12	RGL15012	19.60	31.60	7.75	1.23	4.50	0.72	6.34	6.25	30.68	368.14	9,779	197.4
200	2	RGL2002	10.59	12.59	9.00	1.49	5.25	0.84	1.52	7.25	41.28	82.56	9,690	161.3
	4	RGL2004	12.59	16.59	9.00	1.49	5.25	0.84	2.52	7.25	41.28	165.13	9,690	185.8
	6	RGL2006	14.59	20.59	9.00	1.49	5.25	0.84	3.52	7.25	41.28	247.69	9,690	210.3
	8	RGL2008	16.59	24.59	9.00	1.49	5.25	0.84	4.52	7.25	41.28	330.25	9,690	234.8
	10	RGL20010	18.59	28.59	9.00	1.49	5.25	0.84	5.52	7.25	41.28	412.81	9,690	259.3
	12	RGL20012	20.59	32.59	9.00	1.49	5.25	0.84	6.52	7.25	41.28	495.38	9,690	283.8

Models Shown:



RGL2506 RGL60010

Features

- Positive mechanical locking collar safely supports load for extended periods of time with hydraulic pressure released.
- Patented swivel cap provides concentrated load centering up to 5 degrees.
- Sealing technology provides rod lubrication to reduce friction and wear.
- Optimized piston glad design resists side loading conditions corrosion and provides exceptional durability.
- Robust retaining ring withstands full load end stop and conforms with ANSI B30.1 standards.
- Power-Tech nitro-carburization surface treatment inhibits corrosion and provides exceptional durability.
- Base mounting holes standard on all models (they are not maintained to port location.)

Note: When selecting a hydraulic cylinder(s) capacity and stroke, Power Team recommends that you size to the 80% Rule. This will ensure additional safety factor and extend the product performance over time.

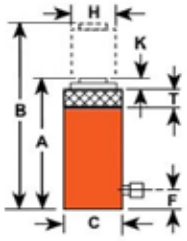

Base Mounting Holes



Four base mounting holes are 45° apart - standard on all models.

Tonnage	# of Base Mounting Holes	Base Thread Size	Base Thread Depth (in.)	Base Mounting Diameter (in.)	Orientation
250	4	M24X3.0 - 6H	1.457	6.06	Mounting hole orientation is not maintained to port location
300	4	M24X3.0 - 6H	1.457	7.06	
400	4	M30x3.5 - 6H	1.8	7.65	
500	4	M30x3.5 - 6H	1.5	8.95	
600	4	M33X2.0 - 6H	1.95	9.65	

Ordering Information

Tonnage	Stroke	Order No.	A	B	C	F	H	K	T	Bore Dia.	Cyl. Eff. Area (Adv.)	Oil Cap.	Internal Press at Cap.	Weight w/o Oil
			Ret. Height	Ext. Height	Out. Dia.	Base to Port	Piston Rod Dia.	Swivel Cap Protrusion	Nut Thickness					
(tons)	(in.)		(in.)	(in.)	(in.)	(in.)	(in.)	(in.)	(in.)	(in.)	(sq. in.)	(cu. in.)	(psi)	(lbs.)
250	2	RGL2502	11.74	13.74	10.10	2.35	6.00	0.90	1.66	8.00	50.26	100.53	9947	237.4
	4	RGL2504	13.74	17.74	10.10	2.35	6.00	0.90	1.66	8.00	50.26	201.06	9947	269.8
	6	RGL2506	15.74	21.74	10.10	2.35	6.00	0.90	1.66	8.00	50.26	301.58	9947	302.3
	8	RGL2508	17.74	25.74	10.10	2.35	6.00	0.90	1.66	8.00	50.26	402.11	9947	334.7
	10	RGL25010	19.74	29.74	10.10	2.35	6.00	0.90	1.66	8.00	50.26	502.64	9947	367.2
	12	RGL25012	21.74	33.74	10.10	2.35	6.00	0.90	1.66	8.00	50.26	603.17	9947	399.6
300	2	RGL3002	13.74	15.74	11.40	2.48	6.50	1.04	3.24	9.00	63.62	127.23	9432	356.8
	4	RGL3004	15.74	19.74	11.40	2.48	6.50	1.04	3.24	9.00	63.62	254.46	9432	396.9
	6	RGL3006	17.74	23.74	11.40	2.48	6.50	1.04	3.24	9.00	63.62	381.69	9432	437.0
	8	RGL3008	19.74	27.74	11.40	2.48	6.50	1.04	3.24	9.00	63.62	508.92	9432	477.1
	10	RGL30010	21.74	31.74	11.40	2.48	6.50	1.04	3.24	9.00	63.62	636.15	9432	517.1
	12	RGL30012	23.74	35.74	11.40	2.48	6.50	1.04	3.24	9.00	63.62	763.38	9432	557.2
400	2	RGL4002	15.62	17.62	13.30	2.77	7.50	1.20	3.80	10.50	86.60	173.21	9237	559.4
	4	RGL4004	17.62	21.62	13.30	2.77	7.50	1.20	3.80	10.50	86.60	346.42	9237	613.4
	6	RGL4006	19.62	25.62	13.30	2.77	7.50	1.20	3.80	10.50	86.60	519.62	9237	667.5
	8	RGL4008	21.62	29.62	13.30	2.77	7.50	1.20	3.80	10.50	86.60	692.83	9237	721.6
	10	RGL40010	23.62	33.62	13.30	2.77	7.50	1.20	3.80	10.50	86.60	866.04	9237	775.7
	12	RGL40012	25.62	37.62	13.30	2.77	7.50	1.20	3.80	10.50	86.60	1039.25	9237	829.8
500	2	RGL5002	16.30	18.30	14.75	2.90	8.00	1.31	4.26	11.50	103.87	207.73	9628	714.9
	4	RGL5004	18.30	22.30	14.75	2.90	8.00	1.31	4.26	11.50	103.87	415.46	9628	780.8
	6	RGL5006	20.30	26.30	14.75	2.90	8.00	1.31	4.26	11.50	103.87	623.20	9628	846.6
	8	RGL5008	22.30	30.30	14.75	2.90	8.00	1.31	4.26	11.50	103.87	830.93	9628	912.4
	10	RGL50010	24.30	34.30	14.75	2.90	8.00	1.31	4.26	11.50	103.87	1038.66	9628	978.2
	12	RGL50012	26.30	38.30	14.75	2.90	8.00	1.31	4.26	11.50	103.87	1246.39	9628	1,044.0
600	2	RGL6002	17.01	19.01	16.00	3.02	9.00	1.42	4.46	12.50	122.71	245.43	9779	858.5
	4	RGL6004	19.01	23.01	16.00	3.02	9.00	1.42	4.46	12.50	122.71	490.86	9779	938.2
	6	RGL6006	21.01	27.01	16.00	3.02	9.00	1.42	4.46	12.50	122.71	736.29	9779	1,017.9
	8	RGL6008	23.01	31.01	16.00	3.02	9.00	1.42	4.46	12.50	122.71	981.72	9779	1,097.7
	10	RGL60010	25.01	35.01	16.00	3.02	9.00	1.42	4.46	12.50	122.71	1227.15	9779	1,177.4
	12	RGL60012	27.01	39.01	16.00	3.02	9.00	1.42	4.46	12.50	122.71	1472.58	9779	1,257.1

Model Shown:

RA1006L, RA556L



Features

POSITIVE MECHANICAL LOCKING COLLAR TO SUPPORT EXTENDED LOAD HOLDING.

- Supports lifted load for extended periods of time with hydraulic pressure released.
- At half the weight of steel cylinders of comparable capacity, aluminum cylinders are ideal when portability is a key factor.
- Features carrying handle.
- Complies with ANSI / ASME B30.1 Safety Standards.

Locking Collar



Locking collar feature permits non-hydraulic support of load.

Learn More - About Hydraulic Safety Insight



Looking for great safety suggestions? Visit our Resource Section to get a better understanding of hydraulic and mechanical safety insights on what to look for when working around hydraulics.

Technical Dimensions

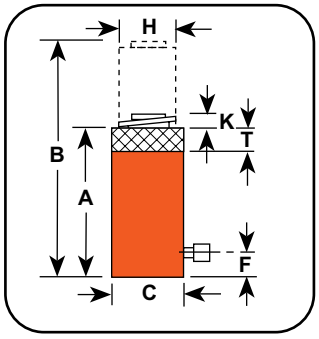

Ordering Information

Cyl. Cap. (tons)	Stroke (in.)	Order No.	Oil Cap. (cu. in.)	A Retracted Height (in.)	B Extended Height (in.)	C Outside Dia. (in.)	F Base to Port (in.)	H Piston Rod Dia. (in.)	K Piston Rod Protrusion (in.)	T Nut Thickness (in.)	Bore Dia. (in.)	Cylinder Effective Area (sq. in.)	Int. Press. at Cap. (psi)	Tons at 10,000 (tons)	Prod. Wt. (lbs.)
55	6.13	RA556L	67.6	12.50	18.63	5.25	1.38	3.25	0.50	1.50	3.75	11.04	9,960	55.2	29.6
100	6.25	RA1006L	129	13.38	19.63	7.38	1.19	4.50	0.25	1.50	5.13	20.62	9,696	103.1	64.0

Model Shown:
R556L



Features

POSITIVE MECHANICAL LOCKING COLLAR TO SUPPORT LOAD.

- Supports lifted load for extended periods of time with hydraulic pressure released.
- Visible indicator band alerts when stroke limit is reached. Overflow port ("weep hole") stroke limiter prevents piston from being overextended.
- All cylinders feature coated pistons to resist corrosion and abrasion.
- Complies with ANSI / ASME B30.1 Safety Standards.

Technical Dimensions

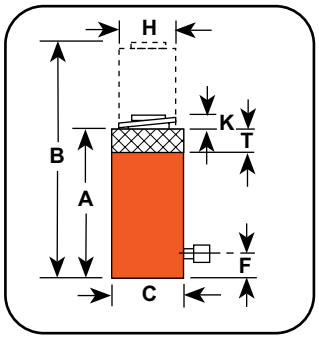

Optional Swivel Load Caps Ordering Info

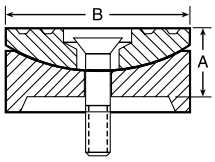

Cylinder Tonnage	Swivel Cap Order No.	Wt. (lbs.)	A (in.)	B (in.)
55-100	420866	1.8	1.00	2.81
150-200	420867	8.8	1.50	5.13
280	420868	13.5	1.75	5.88
355	420869	37.0	2.75	7.69
430	420870	52.0	3.13	8.88
565	420871	78.0	3.63	9.88

Reduce the effects of off-center loading. Tilt up to 5 degrees. Radial grooves on top of cap reduce load slippage. Notch across face of each cap helps keep loads having a round shaped centered.

Ordering Information

Cyl. Cap. (tons)	Stroke (in.)	Order No.	Oil Cap. (cu. in.)	A Retracted Height (in.)	B Extended Height (in.)	C Outside Dia. (in.)	F Base to Port (in.)	H Piston Rod Dia. (in.)	L Piston Rod Protrusion (in.)	T Nut Thickness (in.)	Bore Dia. (in.)	Cylinder Effective Area (sq. in.)	Int. Press. at Cap. (psi)	Tons at 10,000 (tons)	Prod. Wt. (lbs.)
55	2.0	R552L	22.1	6.38	8.38	4.94	1.00	3.75	0.13	1.44	3.75	11.04	9,964	55.2	33.7
	6.0	R556L	66.3	10.38	16.38	4.94	1.00	3.75	0.13	1.44	3.75	11.04	9,964	55.2	58.0
	10.0	R5510L	110.4	14.38	24.38	4.94	1.00	3.75	0.13	1.44	3.75	11.04	9,964	55.2	80.0
100	2.0	R1002L	41.3	7.25	9.25	6.50	1.00	5.13	0.13	1.75	5.13	20.63	9,695	103.0	66.0
	6.0	R1006L	123.8	11.25	17.25	6.50	1.00	5.13	0.13	1.75	5.13	20.63	9,695	103.0	103.0
	10.0	R10010L	206.3	15.25	25.25	6.50	1.00	5.13	0.13	1.75	5.13	20.63	9,695	103.0	142.0
150	2.0	R1502L	61.4	8.13	10.13	8.06	1.25	6.25	0.13	1.75	6.25	30.68	9,778	153.4	117.0
	6.0	R1506L	184.1	12.13	18.13	8.06	1.25	6.25	0.13	1.75	6.25	30.68	9,778	153.4	177.0
	10.0	R15010L	306.8	16.13	23.13	8.06	1.25	6.25	0.13	1.75	6.25	30.68	9,778	153.4	235.0
200	2.0	R2002L	82.6	9.50	11.50	9.25	1.63	7.25	0.13	2.00	7.25	41.28	9,690	206.4	183.0
	6.0	R2006L	247.7	13.50	19.50	9.25	1.63	7.25	0.13	2.00	7.25	41.28	9,690	206.4	259.0
	8.0	R2008L	330.3	15.50	23.50	9.25	1.63	7.25	0.13	2.00	7.25	41.28	9,690	206.4	265.0
280	2.0	R2802L	113.5	9.75	11.75	10.88	1.63	8.50	0.13	2.25	8.50	56.74	9,870	283.7	261.0
	6.0	R2806L	340.4	13.75	19.75	10.88	1.63	8.50	0.13	2.25	8.50	56.74	9,870	283.7	359.0
	10.0	R28010L	567.4	17.75	27.75	11.75	1.63	8.50	0.13	2.25	8.50	56.74	9,870	283.7	459.0
355	2.0	R3552L	141.8	11.50	13.50	11.75	2.13	9.50	0.13	2.38	9.50	70.88	10,017	354.4	381.0
	6.0	R3556L	425.3	15.50	21.50	11.75	2.13	9.50	0.13	2.38	9.50	70.88	10,017	354.4	512.0
430	2.0	R4302L	173.2	13.13	15.13	13.00	2.50	10.50	0.13	2.75	10.50	86.59	9,932	433.0	556.0
	6.0	R4306L	519.5	17.13	23.13	13.00	2.50	10.50	0.13	2.75	10.50	86.59	9,932	433.0	725.0
	10.0	R43010L	865.9	21.13	31.13	13.00	2.50	10.50	0.13	2.75	10.50	86.59	9,932	433.0	894.0
565	2.0	R5652L	226.2	14.63	16.63	14.88	2.75	12.00	0.13	3.13	12.00	113.10	9,991	565.5	811.0
	6.0	R5656L	678.6	18.63	24.63	14.88	2.75	12.00	0.13	3.13	12.00	113.10	9,991	565.5	1031.0
	10.0	R56510L	1131	22.63	32.63	14.88	2.75	12.00	0.13	3.13	12.00	113.10	9,991	565.5	1251.0

Model Shown:

RGP5652, RGP2202



Features

- The Mechanical locking collar safely supports loads for an extended period of time removing the chance of a hydraulic leak down causing a load shift.
- The Patented 5 degree deep swivel cap concentrates loads to minimize offset conditions.
- Compact design is ideal for confined areas
- Buttress thread design supports locking collar strength and security along with time saving quick run-down
- *Power-Tech* nitro-carburization surface treatment inhibits corrosion and provides exceptional durability
- Weep hole provides visual indication of piston over travel
- One high flow 3/8" NPTF female half coupler and carry eyelets are included

Technical Dimensions

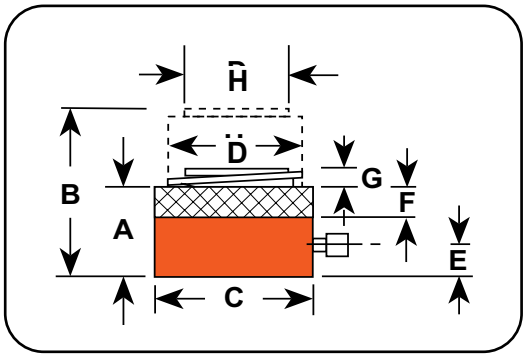

Pancake locking cylinders are ideal for tight quartered locations.



Ordering Information

Tonnage	Stroke	Order No.	A	B	C	D	E	F	G	H	Cyl. Eff. Area (Adv.)	Oil Cap.	Internal Press at Cap.	Tons at 10,000 PSI	Weight w/o Oil
			Ret. Height	Ext. Height	Outside Dia.	Bore Dia.	Base to Port	Nut Thickness	Swivel Cap Protusion	Swivel Cap Dia.					
(US Tons)	(in.)		(in.)	(in.)	(in.)	(in.)	(in.)	(in.)	(in.)	(in.)	(sq. in.)	(cu. in.)	(psi)	(US Tons)	(lbs.)
67	1.75	**RGP672**	4.78	6.53	5.80	4.13	0.86	0.88	0.03	2.78	13.36	23.39	10,027	66.8	33.5
110	1.75	**RGP1102**	5.21	6.96	7.00	5.38	0.89	1.13	0.04	3.87	22.69	39.71	9,696	113.4	52.3
180	1.75	**RGP1802**	5.82	7.57	9.00	6.75	1.05	1.38	0.10	4.63	35.78	62.62	10,060	178.9	97.2
220	1.75	**RGP2202**	6.17	7.92	10.00	7.50	1.11	1.60	0.10	5.37	44.18	77.31	9,960	220.9	127.2
280	1.75	**RGP2802**	6.27	8.02	11.00	8.50	1.20	1.65	0.10	5.56	56.74	99.30	9,869	283.7	155.2
430	1.75	**RGP4302**	7.00	8.75	14.00	10.50	1.55	1.88	0.10	6.66	86.59	151.53	9,932	432.9	282.5
565	1.75	**RGP5652**	7.60	9.35	16.00	12.00	1.84	2.10	0.25	7.77	113.09	197.91	9,992	565.5	398.7



ZCC500-6

Features

- Cylinder equipped with integral retainer ring and may be “dead-headed” without damage.
- Hardened Integral Swivel Cap to reduce the effects of off-center loading.
- Piston wiper to keep dirt, water and other contaminants out of the internal bearing and bore surfaces.
- Plated piston resists corrosion and abrasion.
- Base mounting holes are standard.
- Each cylinder has one 3/8" NPTF female half coupler.
- Maximum operating pressure 10,000 psi (700 bar).

Features

- Available with integrated hardened flat load cap, or optional swivel cap.
- Piston wiper to keep dirt, water and other contaminants out of the internal bearing and bore surfaces.
- Double-acting for fast and positive retraction.
- Cylinder may be “dead-headed” without damage.
- Plated piston resists corrosion and abrasion.
- Built-in safety relief valve prevents over-pressurization of the retraction circuit.
- Each cylinder has two 3/8" NPTF female half couplers.
- Maximum operating pressure 10,000 psi (700 bar).

Need High Res Image

ZDD1000-6



Features

- Hardened Integral Swivel Cap to reduce the effects of off-center loading.
- Locking Collar supports load mechanically for extended periods of time with hydraulic pressure released.
- Equipped with overflow port stroke limiter to prevent piston from being overextended.
- Special coating provides corrosion resistance and low friction for smoother operation.
- Each cylinder has one 3/8" NPTF female half coupler.
- Maximum operating pressure 10,000 psi (700 bar).

For more information on the Z Series Cylinders, please contact Customer Service/Technical Support.

Return to Top

MARKET LEADING HIGH PRESSURE POWER UNITS FOR A WIDE ARRAY OF APPLICATIONS AND USES.

Every power unit goes through a rigorous assembly and test process to ensure the highest level of performance:

- Power units are available in manual or powered configurations. Powered options include electric, air, and gas.
- A wide array of reservoir sizes from under 0.25 to 55 gallons
- Variety of valve configurations, such as dump, 2-way, 3-way and 4-way in manual and solenoid configurations,
- Whether you are seeking a manual, electrical or an air power pump, Power Team pumps can generate flows up to 420 cu. in. / @ 10,000 PSI.



POWERTHON LIFETIME WARRANTY



Section / Series	Power Source	Flow Stages	Flow @ Max Pressure	Page(s)
Introduction	All	All	All	45-48
P	Manual	Single & Two-Speed	12-55 cu. in.	49-51
RPS	Manual	Single & Two-Speed	—	52
PA6	Air	Single-Acting	105 cu. in.	53-54
PA6D	Air	Single-Speed	6 cu. in.	55-56
PA9	Air	Single-Speed	9 cu. in.	57-58
PA60	Air	Two-Speed	6 cu. in.	59-60
PA50	Air	Single-Speed	28 cu. in.	61-62
PA17	Air	Two-Speed	17 cu. in.	63-64
PA46/55	Air	Two-Speed	46-55 cu. in.	65-66
PB	Battery	Two-Speed	6 cu. in.	71-72
PE10	Electric	Two-Speed	10 cu. in.	73-74
PE17	Electric	Two-Speed	17 cu. in.	75-76
PE18	Electric	Two-Speed	18 cu. in.	77-78
PE21	Electric	Two-Speed	22 cu. in.	79-80
PED	Electric	Two-Speed	25 cu. in.	81-82
PE30	Electric	Two-Speed	30 cu. in.	83-84
PE46	Electric	Two-Speed	46 cu. in.	85-86
PE55	Electric	Two-Speed	55 cu. in.	87-88
PE60	Electric	Two-Speed	56 cu. in.	89-90
PQ60	Electric	Two-Speed	60 cu. in.	91-92
PQ120	Electric	Two-Speed	120 cu. in.	93-94
PE400	Electric	Two-Speed	420 cu. in.	95-96
PE-NUT	Electric	Two-Speed	30 cu. in.	97
PG120_CP	Gas	Two-Speed	130 cu. in.	98
PG30/55	Gas	Two-Speed	30-55 cu. in.	99-100
PG120-PG400	Gas	Two-Speed	130-420 cu. in.	101-102
MCS	Electric	Two-Speed	55-120 cu. in.	103-106
ATO	Air, Elec., Gas	Custom Built	-	107-110



SELECTING THE RIGHT PUMP:

Step 1 Select the hydraulic pump that best suits the application.

Step 2 Select the series of pump with adequate oil output and reservoir capacity to power tool.

Step 3 Select pump within series with the valve option that is best suited to the tool and application.

PUMP SIZING CONSIDERATIONS:

1. What maximum system operating pressure (psi) is required?
2. What volume of oil delivery is required? (For manual pumps, cu. in. of oil per handle stroke. For powered pumps, cu. in./min. of oil).
3. Is a single or two-speed pump required? (Two-speed pumps deliver high oil volume at low pressure for rapid cylinder piston advance, then shift to high pressure, low volume stage under load).
4. What is the preferred source of power?
   a. Manual (hand or foot operated): Provides portability, can be used where electricity or shop air are not available.
   b. Air/Hydraulic: Uses shop air or a portable air compressor.
   c. Electric/Hydraulic: What voltage is available? Is a battery operated pump preferred?
   d. Gasoline Engine/Hydraulic: Powers high-output pumps at remote job sites where air or electricity are unavailable.
5. Is portability of the pump a factor to consider?
6. Will the pump be used intermittently, or will it need to provide high-cycle operation? Does the application require that the pump be capable of starting under load?
7. Is fluid heat build-up a factor in your application? High-cycle applications may require a larger capacity oil reservoir for cooling.
8. Will the application require large displacement or multiple cylinders? Reservoir size and pump output levels will be factors to consider.
9. Does the working environment require a pump having a low operating noise (dBA) level?
10. Must the pump operate in a spark-free environment?



MANUALLY-OPERATED HYDRAULIC PUMPS:



- **P12, P23, P55** – These single-speed pumps are for use with single-acting cylinders.
- **P19/P19L, P59/P59L, P59F, P157, P159, P300, P460** – These two-speed pumps are used with single-acting cylinders. The two-speed feature provides high oil volume for fast cylinder piston approach to the work, then the pump automatically shifts to the high pressure stage. This reduces the number of pump handle strokes required.
- **P157D, P159D, P300D, P460D** – These two-speed pumps are used with double-acting cylinders.

AIR / HYDRAULIC PUMPS:

Used where air is the preferred energy source or where electricity is not available. Ideal for use in petrochemical, mining or other flammable or explosive environments.



- **PA6 Series** – These single-speed pumps drive single or double-acting cylinders.
- **PA9 Series** – These new single-speed pumps drive single-acting cylinders and are ideal for powering portable hydraulic tools.
- **PA50 Series** – These single-speed pumps drive single or double-acting low pressure (3,200 psi) cylinders.
- **PA60** – This two-speed pump is equipped with a manifold to operate multiple cylinders, and provides a 2-gallon reservoir.
- **PA64** – Similar to PA60, this two-speed pump drives single or double-acting cylinders.
- **PA172 and PA174** – These “economy” two-speed pumps drive single or double-acting cylinders, depending on the model chosen. Provide a low weight-to-output ratio.
- **PA462 and PA464 Series** – These two-speed pumps drive single or double-acting cylinders, depending on the model selected. They offer high speed cylinder piston advance.
- **PA554** – This two-speed pump drives single or double-acting cylinders, delivering a high volume of oil.

ELECTRIC / HYDRAULIC PUMPS:

All of the following pumps are two-speed models, and can be used to drive single or double-acting cylinders.



- **PE/PB10 Series“Quarter Horse” Series** – These pumps feature a 1/4 hp electric motor. A battery-powered version is available. Having a low noise level and weighing just 20 lbs. They are ideal for powering portable hydraulic spreaders, nut splitters, pipe flange spreaders and other tools.
- **PE17 Series** – CSA rated for intermittent duty, these feature a 1/2 hp, single-phase induction motor with a low noise level (67-81 dBA). Smaller generators and low amperage circuits can be used as a power source.
- **PE46 Series** – Powered by a 1-1/2 hp, single-phase induction motor, operates at a moderate noise level of 77-81 dBA. CSA rated for intermittent duty.
- **PE18 Series** – CSA rated for intermittent duty, these feature a 1/2 hp, single-phase universal motor with a noise level of 85-90 dBA. Provide high-performance at a low price. Has low amperage draw.
- **PE30 Series** – Equipped with a 1 hp, single-phase permanent magnet motor, have a noise level of only 82-87 dBA. CSA rated for intermittent duty, and requires a relatively low voltage. Ideal for use in general construction applications. Roll cage/handle protects the motor and controls.
- **PE55 and PED25 Series** – Equipped with a 1-1/8 hp, single-phase universal motor, have a 90-95 dBA noise level. Offer the best weight to performance ratio of any Power Team electric/hydraulic pump. CSA rated for intermittent duty. The PED25 versions are “dual flow” pumps which deliver the same low and high pressures to both valves, and have a noise level of 80-85 dBA. They have a 1-1/2 hp induction motor.

ELECTRIC / HYDRAULIC PUMPS: (CONT.)



- **PE60 Series** – These Vanguard® Supreme® pumps provide trouble-free service in the most severe working environments. Powered by a 1-1/8 hp, single-phase motor, has a moderate noise level of 80-85 dBA. Starts under load even at the reduced voltages encountered on construction sites. High-output pumps, ideal for use with post-tensioning/pre-stressing jacks and other high-pressure hydraulic tools.
- **"Custom-Built" Pumps** – Power Team offers you "assemble to order" electric/hydraulic pumps to suit unique applications. You can choose from pre-engineered, off-the-shelf components to customize your pump.
- **PE21 Series** – Ideal for heavy-duty, extended-cycle applications. Powered by a 1 hp, single-phase motor, pump operates at a very low noise level of 70 dBA. Pump automatically shuts down in the event of a power failure. CSA rated for intermittent duty.
- **"Quiet" Pumps** – Our PQ60 and PQ120 series operate at a very low noise level of between 73-78 dBA. The PQ60 has a 2 hp (single-phase) motor; the PQ120 has a 3 hp (three-phase) motor. These pumps are designed for heavy-duty, extended cycle operations. CSA rated for intermittent duty.
- **PE400 Series** – High-flow units deliver a large volume of high pressure oil for heavy construction and maintenance operations employing high tonnage cylinders. The PE400 is powered by a 10 hp, three-phase motor. Low noise rating of 73-80 dBA.

GASOLINE-DRIVEN HYDRAULIC PUMPS:

These two-speed pumps are ideal for use in remote applications, such as construction sites. May be used with single or double-acting cylinders.



- **PG30 Series** – Powered by a 2-cycle, 2 hp Honda engine, these have an integral, protective "roll cage" and adequate reservoir capacity for cylinders up to 100 tons capacity or more. Readily portable, and popular in the railroad, rescue and construction markets.
- **PG55 Series** – With a 4-cycle, 4 hp Briggs & Stratton engine, this pump is based on our popular Vanguard® Series hydraulic system. It has a generous five gallon reservoir capacity.
- **PG120 Series** – Powered by a 4-cycle, 5.5 hp Honda engine. Has a five gallon reservoir, and is capable of handling multiple-cylinder lifting tasks. Ideal for the structure moving, pier setting, bridge lifting and concrete contracting industries.
- **PG4004** – Featuring a 4-cycle, 18 hp Honda engine, this unit has a big 20 gallon reservoir. Rugged steel "roll cage" has a hook on top and swivel casters for ease of mobility. Popular for concrete stressing applications.

HYDRAULIC INTENSIFIER:



- **HB Series** – Turns low pressure hydraulic pumps into high pressure power sources to operate single or double-acting cylinders and tools such as crimper's, spreaders, cutters, etc. Compact and portable for use inside a utility vehicle aerial bucket or stowing in a vehicle.

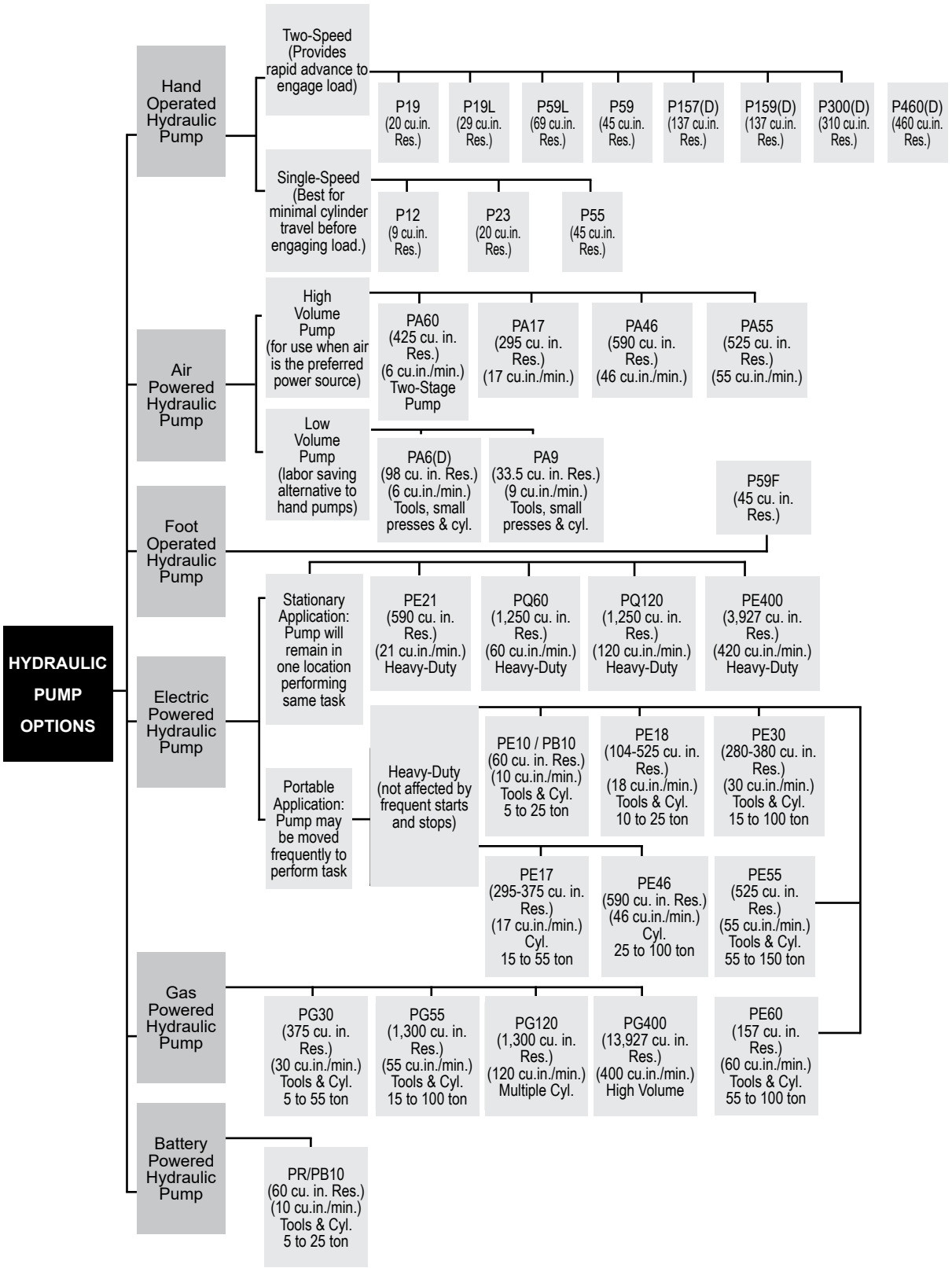
HYDRAULIC PUMP OPTIONS
Hand Operated Hydraulic Pump
Two-Speed (Provides rapid advance to engage load)
P19 (20 cu.in. Res.)
P19L (29 cu.in. Res.)
P59L (69 cu.in. Res.)
P59 (45 cu.in. Res.)
P157(D) (137 cu.in. Res.)
P159(D) (137 cu.in. Res.)
P300(D) (310 cu.in. Res.)
P460(D) (460 cu.in. Res.)
Single-Speed (Best for minimal cylinder travel before engaging load.)
P12 (9 cu.in. Res.)
P23 (20 cu.in. Res.)
P55 (45 cu.in. Res.)
Air Powered Hydraulic Pump
High Volume Pump (for use when air is the preferred power source)
PA60 (425 cu. in. Res.) (6 cu.in./min.) Two-Stage Pump
PA17 (295 cu. in. Res.) (17 cu.in./min.)
PA46 (590 cu. in. Res.) (46 cu.in./min.)
PA55 (525 cu. in. Res.) (55 cu.in./min.)
Low Volume Pump (labor saving alternative to hand pumps)
PA6(D) (98 cu. in. Res.) (6 cu.in./min.) Tools, small presses & cyl.
PA9 (33.5 cu. in. Res.) (9 cu.in./min.) Tools, small presses & cyl.
Foot Operated Hydraulic Pump
P59F (45 cu. in. Res.)
Electric Powered Hydraulic Pump
Stationary Application: Pump will remain in one location performing same task
PE21 (590 cu. in. Res.) (21 cu.in./min.) Heavy-Duty
PQ60 (1,250 cu. in. Res.) (60 cu.in./min.) Heavy-Duty
PQ120 (1,250 cu. in. Res.) (120 cu.in./min.) Heavy-Duty
PE400 (3,927 cu. in. Res.) (420 cu.in./min.) Heavy-Duty
Portable Application: Pump may be moved frequently to perform task
Heavy-Duty (not affected by frequent starts and stops)
PE10 / PB10 (60 cu. in. Res.) (10 cu.in./min.) Tools & Cyl. 5 to 25 ton
PE18 (104-525 cu. in. Res.) (18 cu.in./min.) Tools & Cyl. 10 to 25 ton
PE30 (280-380 cu. in. Res.) (30 cu.in./min.) Tools & Cyl. 15 to 100 ton
PE17 (295-375 cu. in. Res.) (17 cu.in./min.) Cyl. 15 to 55 ton
PE46 (590 cu. in. Res.) (46 cu.in./min.) Cyl. 25 to 100 ton
PE55 (525 cu. in. Res.) (55 cu.in./min.) Tools & Cyl. 55 to 150 ton
Gas Powered Hydraulic Pump
PG30 (375 cu. in. Res.) (30 cu.in./min.) Tools & Cyl. 5 to 55 ton
PG55 (1,300 cu. in. Res.) (55 cu.in./min.) Tools & Cyl. 15 to 100 ton
PG120 (1,300 cu. in. Res.) (120 cu.in./min.) Multiple Cyl.
PG400 (13,927 cu. in. Res.) (400 cu.in./min.) High Volume
PE60 (157 cu. in. Res.) (60 cu.in./min.) Tools & Cyl. 55 to 100 ton
Battery Powered Hydraulic Pump
PR/PB10 (60 cu. in. Res.) (10 cu.in./min.) Tools & Cyl. 5 to 25 ton

Model Shown:

P55, P12, P23



Features

STEEL HAND PUMPS BEST SUITED FOR MRO APPLICATIONS.

- All metal construction won't burn through in welding environments.
- Formed metal handle provides rigidity, and reduces operator fatigue with grip.
- Convenient fill port enables pumps to be filled in a horizontal or vertical position, excluding P12.
- Fill cap seal acts as safety valve preventing over-pressurizing of reservoir.
- Large valve knob gives added control for slowly metering loads down.

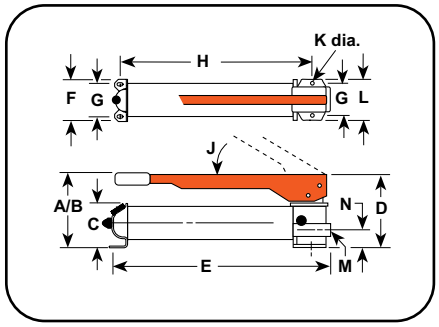

Pump Protection System

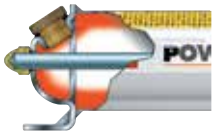

Power Team hand pumps, with the angled fill port, have a built in "relief valve" protection system. This system is designed to protect over-pressurization of the reservoir from sudden back pressure. This system also works as a seal to prevent oil leaks only fill to bottom of threads.

Foot Pump Conversion Kit



For Use With:	Kit Order No.	Wt. (lbs.)
P55, P59	FK59	6.0

Technical Dimensions

Order No.	A (in.)	B (in.)	C (in.)	D (in.)	E (in.)	F (in.)	G (in.)	H (in.)	J (deg.)	K (in.)	L (in.)	M (in.)	N (in.)
P12	4.00	13.00	2.06	4.00	13.50	3.38	2.19	11.50	45°	0.19	3.38	3/8 NPTF	1.13
P19	5.50	14.63	2.88	4.56	13.69	4.00	3.25	11.06	53°	0.31	4.00	3/8 NPTF	1.41
P23*	6.25	13.00	3.50	5.56	13.63	4.25	3.25	10.31	38°	0.31	4.75	3/8 NPTF	1.63
P55	6.50	21.00	3.50	5.56	23.00	4.25	3.25	19.75	38°	0.31	4.75	3/8 NPTF	1.63
P59	7.00	21.00	3.50	5.00	23.00	4.25	3.25	19.75	38°	0.31	4.75	3/8 NPTF	1.63
P59F	3.50	16.75	3.50	6.00	23.25	4.25	3.25	20.25	—	0.31	4.50	3/8 NPTF	1.69

*The P23 pump maximum pressure is 3000 psi only.

For Use With	Speed	Order No.	Volume per Stroke		Max. Pressure		Handle Effort	Reservoir		Oil Port	Prod. Wt.
			LP (cu. in)	HP (cu. in)	LP (psi)	HP (psi)	(lbs.)	Oil Cap. (cu. in.)	Usable Oil Cap. (cu. in.)	(in.)	(lbs.)
Single-Acting Cylinders	1	P12	—	0.069	—	10,000	75	12.00	9.00	3/8 NPTF	5.70
	2	P19	0.305	0.076	325	10,000	99	24.40	20.00	3/8 NPTF	6.60
	1	P23	—	0.160	—	3,000	70	23.80	20.30	3/8 NPTF	12.00
	1	P55	—	0.160	—	10,000	145	55.00	45.00	3/8 NPTF	15.80
	2	P59	0.662	0.160	325	10,000	145	55.00	45.00	3/8 NPTF	17.20
	2	P59F	0.550	0.130	325	10,000	120	55.00	45.00	3/8 NPTF	14.00

LP = Low Pressure HP = High Pressure

Model Shown:

P19L, P59L, P59L-1500, P59L-1500G





9/16 High Press.

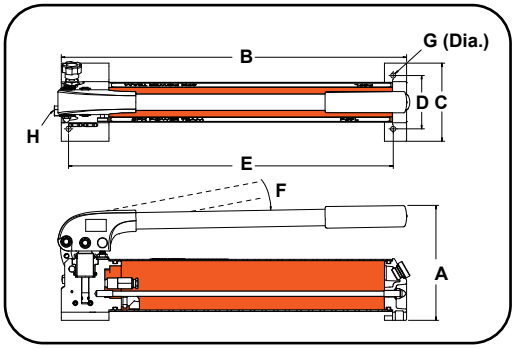

Features

PUMP AUTOMATICALLY SHIFTS INTO THE HIGH PRESSURE LIFT STAGE UPON CONTACT WITH THE LOAD.

- Two-speed reduces handle strokes so you work faster and easier.
- More usable oil volume allows for use with larger or longer stroke cylinders.
- True unloading valve provides more efficiency and lower handle force.
- Link design reduces handle effort by 40%.
- Durable aluminum reservoir, manifold, and end cap.
- Ergonomic non-slip handle grip provides more comfort.
- Spring loaded handle lock incorporated into handle.
- Aluminum design reduces weight.

The P59L hand pump is able to quickly advance the cylinder to the load with it's two speed operation.



Technical Dimensions

Order No.	A (in.)	B (in.)	C (in.)	D (in.)	E (in.)	F (deg.)	G (in.)	H (in.)
P19L	5.50	13.69	4.13	3.25	11.06	40°	5/16	3/8 NPTF
P59L	7.00	21.00	5.00	3.25	19.75	50°	5/16	3/8 NPTF
P59L-1500	7.17	21.91	5.47	3.25	19.75	47°	5/16	9/16-18 UNF-2B **
P59L-1500G*	7.17	21.91	5.47	3.25	19.75	47°	5/16	9/16-18 UNF-2B **

* Overall length, with the skid plate, is 28.30 in. (718.8 mm.).

** High pressure 60° cone port.

Ordering Information

For Use With	Speed	Order No.	Volume per Stroke		Max. Pressure		Handle Effort	Reservoir		Oil Port	Prod. Wt.
			LP (cu. in)	HP (cu. in)	LP (psi)	HP (psi)	(lbs.)	Oil Cap. (cu. in.)	Usable Oil Cap. (cu. in.)	(in.)	(lbs.)
Single-Acting Cylinders	2	P19L	0.250	0.050	850	10,000	78	29.00	27.00	3/8 NPTF	5.10
	2	P59L	0.720	0.150	850	10,000	104	69.00	66.00	3/8 NPTF	8.90
	2	P59L-1500	0.68	0.05	300	21,750	72	67.1	44.5	9/16 High Press.	10.4
	2	P59L-1500G*	0.68	0.05	300	21,750	72	67.1	44.5	9/16 High Press.	14.4

* Equipped with a skid plate and a digital gauge.

LP = Low Pressure

HP = High Pressure

CAUTION: P59L-1500 pumps are not recommended for use with 10,000 psi tools.

Model Shown:

P300, P157, P159D, P460



Features

HEAVY-DUTY STEEL HAND PUMPS HOLD UP TO THE MOST DEMANDING APPLICATIONS.

- Rugged all metal construction for strength and durability that won't burn through in welding environments.
- Heavy-duty, formed metal handle provides rigidity, and reduces operator fatigue with grip.
- Convenient oil fill ports.
- Fill cap seal acts as safety valve to prevent over-pressurizing of reservoir.
- Relief valve inboard of check valve prevents loads from drifting down.
- Large valve knob gives added control for slowly metering loads down.

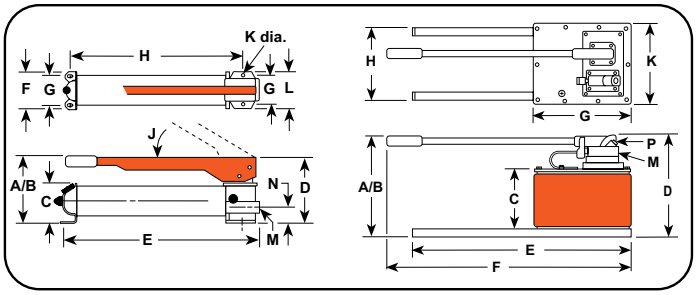

Foot Pump Conversion Kit



For Use With:	Kit Order No.	Wt. (lbs.)
P157, P159, P300, P300D	FK159B	6.00

Technical Dimensions

Order No.	A (in.)	B (in.)	C (in.)	D (in.)	E (in.)	F (in.)	G (in.)	H (in.)	J (deg.)	K (in.)	L (in.)	M (in.)	N (in.)	P (in.)
P157 / P159	7.75	20.50	4.88	6.88	22.75	3.88	3.00	19.75	39	0.31	3.75	3/8 NPTF	2.25	—
P300	8.25	21.00	4.50	6.88	22.63	8.50	7.50	20.72	39	0.31	3.75	3/8 NPTF	2.25	—
P460	11.13	31.00	6.75	11.38	24.00	29.25	11.00	9.00	80	9.50	—	3/8 NPTF	—	1/4 NPTF

Ordering Information

For Use With	Speed	Order No.	Volume per Stroke LP (cu. in)	Volume per Stroke HP (cu. in)	Max. Pressure LP (psi)	Max. Pressure HP (psi)	Handle Effort (lbs.)	Reservoir Oil Cap. (cu. in.)	Reservoir Usable Oil Cap. (cu. in.)	Oil Port (in.)	Prod. Wt. (lbs.)
Single-Acting Cylinders	2	P157	0.65	0.160	1,400	10,000	140	152	137	3/8 NPTF	26.70
	2	P159	2.60	0.160	325	10,000	140	152	137	3/8 NPTF	26.20
	2	P300	2.60	0.160	325	10,000	140	1.5 gal.	310	3/8 NPTF	55.30
	2	P460	7.35	0.294	325	10,000	90	2.5 gal.	460	3/8 NPTF	54.90
Double-Acting Cylinders*	2	P157D	0.65	0.160	1,400	10,000	140	152	137	3/8 NPTF	28.80
	2	P159D	2.60	0.160	325	10,000	140	152	137	3/8 NPTF	27.90
	2	P300D	2.60	0.160	325	10,000	140	1.5 gal.	310	3/8 NPTF	57.00
	2	P460D	7.35	0.294	325	10,000	90	2.5 gal.	460	3/8 NPTF	57.90

LP = Low Pressure HP = High Pressure * Pump includes 4-Way Valve

Model Shown:

RPS1006, RPS203H





Features

PRECISION-MATCHED CYLINDER AND PUMP SET FOR WIDE RANGE OF APPLICATIONS.

- Four styles of cylinders to choose from.
- Sets feature single or two-speed hydraulic hand pumps.
- Cylinders of various tonnages with long, medium or short stroke.
- Includes necessary fittings, couplers and 6 foot hose.

OPTIONAL: STORAGE BOX



Storage box for hydraulic cylinder and pump sets. Rugged industrial strength material, strong as steel, never needs painting, won't rust, dent or chip. Weatherproof lid is self sealing and lockable. Molded-in handles, water-tight, one piece bottom and side construction. Strong enough to stand on. Note: Actual product may differ from photo.

Order No.	Dimensions	Wt. (lbs.)
350722	35" L x 14" H x 13.5" W	23.00

Ordering Information

Style of Cylinder	Cyl. Cap. (tons.)	Stroke (in.)	Order No.	Re-tracted Height (in.)	Handle Strokes Required to Fully Extend Cylinders	Cylinder No.	Pump No.	Hose No.	Coupler No.	Pump Speed	Prod. Wt. (lbs.)
"C" Series	5	5.25	RPS55	8.50	75	C55C	P12	9756	9798	Single	12.00
	10	2.13	RPS102**	4.75	32	C102C	P55	9756	9798	Single	26.00
	10	6.13	RPS106**	9.75	93	C106C	P55	9756	9798	Single	32.10
	10	10.13	RPS1010**	13.75	154	C1010C	P55	9756	9798	Single	35.60
	15	4.13	RPS154**	7.88	81	C154C	P55	9756	9798	Single	29.00
	15	6.13	RPS156**	10.69	118	C156C	P55	9756	9798	Single	34.00
	25	6.25	RPS256**	10.75	219	C256C	P55	9756	9798	Single	42.70
	25	14.25	RPS2514**	18.75	285*	C2514C	P159	9756	9798	Two	62.70
	55	6.25	RPS556**	11.13	268*	C556C	P159	9756	9798	Two	82.70
	100	6.63	RPS1006	13.25	428*	C1006C	P460	9756	9798	Two	128.70
"Shorty"	30	2.44	RPS302**	4.63	61*	RSS302	P59	9756	9798	Two	40.00
	50	2.38	RPS552**	5.00	89*	RSS502	P59	9756	9798	Two	50.00
	100	2.25	RPS1002**	5.50	172*	RSS1002	P59	9756	9798	Two	81.00
"Center-Hole"	20	3.00	RPS203H**	6.06	80	RH203	P55	9756	9798	Single	40.50
Alum.	55	6.13	RPS556A**	10.75	262*	RA556	P159	9756	9798	Two	47.00

* Based on 50% of the stroke being made at low-pressure and 50% of the strokes at high pressure.

** Add suffix "B" (example: RPS102B, RPS203HB, etc.) to order set with optional storage box shown above.

Model Shown:

PA6, PA6M-1, PA6-2





Features

COMPACT, LIGHTWEIGHT AND PORTABLE. SINGLE-SPEED PUMPS DESIGNED TO DRIVE SINGLE-ACTING CYLINDERS.

- The power unit of choice for major manufacturers of auto body, frame straighteners and other shop equipment.
- Operate at 40-100 psi shop air pressure at the pump.
- Quiet operation that is suitable for indoor applications, 85 dBA at 10,000 psi.
- Serviceable pump motor is not a “throw away” providing economical repair.
- Permanently vented reservoir cap.
- Internal relief valve protects circuit components, air inlet filter protects motor.

Typical Set-Up

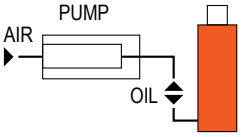

Hook-up for
single-acting cylinders

PA6 is the perfect choice for driving this nut splitter in this heavy truck shop.



Performance Specifications

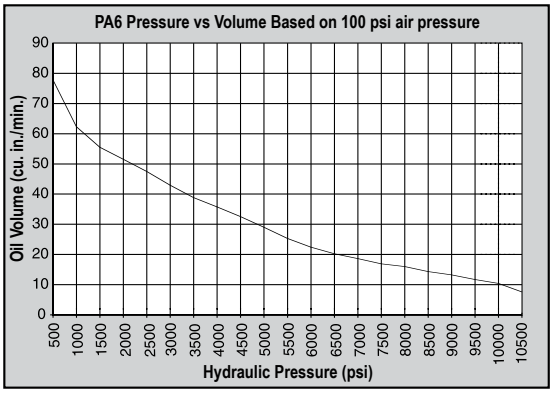

Two Point Lifting System Example



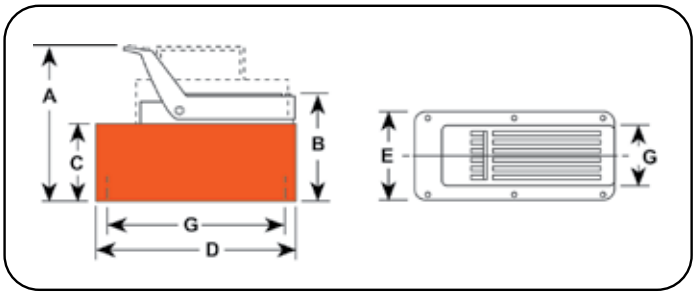

Technical Dimensions

Order No.	A	B	C	D	E	G
	(in.)	(in.)	(in.)	(in.)	(in.)	(in.)
PA6	7.75	5.88	4.38	9.50	5.00	4 x 9.00
PA6A	7.75	5.88	4.38	9.50	5.00	4 x 9.00
PA6AM	7.75	5.88	4.38	9.50	5.00	4 x 9.00
PA6M	7.75	5.88	4.38	9.50	5.00	4 x 9.00
PA6R	7.75	5.88	4.38	9.50	5.00	4 x 9.00
PA6RM	7.75	5.88	4.38	9.50	5.00	4 x 9.00
PA6M-1	7.88	6.00	4.38	12.63	7.38	—
PA6-2	10.25	8.00	7.00	11.50	9.50	5 1/8 x 7.13
PA6M-2	10.00	7.75	6.75	11.50	9.50	8 x 10.00

Ordering Information

Description	Order No.	Air Supply Req'd	Reservoir		Oil Port	Prod. Wt.
			Oil Cap.	Usable Oil Cap.		
		(psi)	(cu. in.)	(cu. in.)	(in.)	(lbs.)
Base model pump with high density polyethylene reservoir.	PA6	40-120	105	98	3/8 NPTF	14.00
PA6 pump with externally adjustable relief valve and polyethylene reservoir	PA6A	40-120	105	98	3/8 NPTF	15.00
PA6 pump with externally adjustable relief valve and metal reservoir.	PA6AM	40-120	105	98	3/8 NPTF	17.00
PA6 pump with metal reservoir.	PA6M	40-120	105	98	3/8 NPTF	18.00
PA6 pump with 12 foot remote control and polyethylene reservoir	PA6R	40-120	105	98	3/8 NPTF	20.58
PA6 pump with 12 foot remote control and metal reservoir.	PA6RM	40-120	105	98	3/8 NPTF	21.58
PA6 pump with 1 gallon metal reservoir.	PA6M-1	40-120	1 gal.	185	3/8 NPTF	23.70
PA6 pump with 2 gallon high density polyethylene reservoir.	PA6-2	40-120	2 gal.	454	3/8 NPTF	24.50
PA6 pump with 2.5 gallon metal reservoir.	PA6M-2	40-120	2.5 gal.	570	3/8 NPTF	32.10

Model Shown:
PA6D



Features

COMPACT, LIGHTWEIGHT AND PORTABLE SINGLE-SPEED PUMP FOR DRIVING DOUBLE-ACTING CYLINDERS.

- Operate at 40-100 psi shop air pressure at the pump.
- Internal relief valve protects circuit components while the air inlet filter protects motor.
- Serviceable pump allows for economical repairs.
- Permanently vented reservoir cap.
- 85 dBA at 10,000 psi for all PA6 pumps.

Typical Set-Up

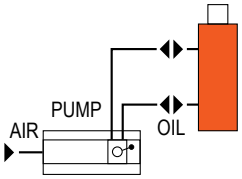

Hook-up for
double-acting cylinders

PA6D pump, 9052 analog and 25 ton cylinder used in a test fixture.



Performance Specifications

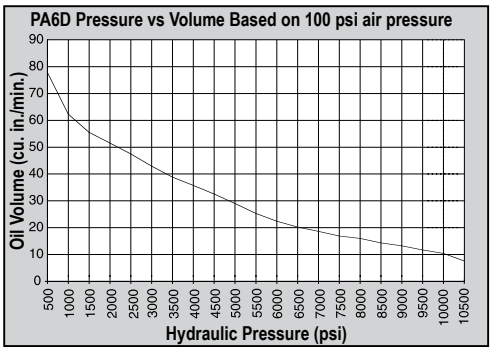

Model Shown:
PA6D2, PA6DM-1





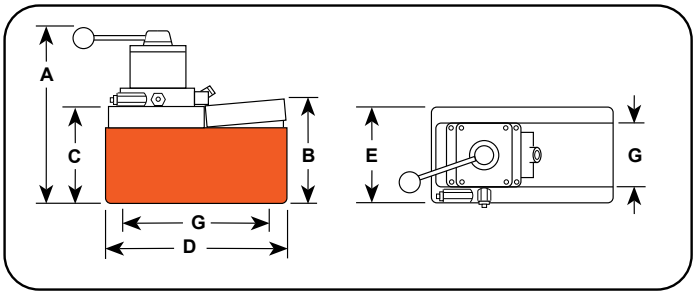

Technical Dimensions

Order No.	A	B	C	D	E	G
	(in.)	(in.)	(in.)	(in.)	(in.)	(in.)
PA6D	10.38	5.88	4.38	9.50	5.00	4 x 9.00
PA6DM	10.38	5.88	4.38	9.50	5.00	4 x 9.00
PA6DM-1	11.00	5.75	4.38	12.63	7.38	n/a
PA6D2	12.75	8.00	7.00	11.31	9.25	5 1/8 x 7.13
PA6DM-2	12.50	7.75	6.75	11.50	9.50	8 x 10.00

Technical Specifications

Description	Order No.	Valve No.	Air Supply Req'd (psi)	Reservoir Oil Cap. (cu. in.)	Reservoir Usable Oil Cap. (cu. in.)	Oil Port (in.)	Prod. Wt. (lbs.)
Base model pump with high density polyethylene reservoir.	PA6D	9504 3-way/4-way	40-120	105	98	3/8 NPTF	18.40
PA6D pump with metal reservoir.	PA6DM	9504 3-way/4-way	40-120	105	98	3/8 NPTF	20.40
PA6D pump with 1 gallon metal reservoir.	PA6DM-1	9504 3-way/4-way	40-120	1 gal.	185	3/8 NPTF	28.10
PA6D pump with 2 gallon high density polyethylene reservoir.	PA6D2	9504 3-way/4-way	40-120	2 gal.	454	3/8 NPTF	28.60
PA6D pump with 2.5 gallon metal reservoir.	PA6DM-2	9504 3-way/4-way	40-120	2.5 gal.	570	3/8 NPTF	36.20

Model Shown:

PA9 Foot Control, PA9H Hand Control





Features

IDEAL FOR POWERING SINGLE-ACTING CYLINDERS AND PORTABLE HYDRAULIC TOOLS.

- Easier to operate than a hand pump, giving you the speed you need at an affordable price.
- Serviceable pump allows for economical repairs.
- Unique bladder design for all-position operation and storage.
- Operates on 40-120 psi shop air, at 20 cfm.
- Hard-coat anodized aluminum housing.
- Oil filler with integral safety relief minimizes chance of damage to reservoir bladder if overfilling occurs.

Typical Set-Up

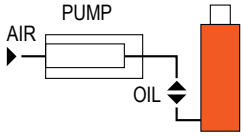

Hook-up for
single-acting cylinders

PA9H Hand Control Pump used in a straightening press.



Performance Specifications

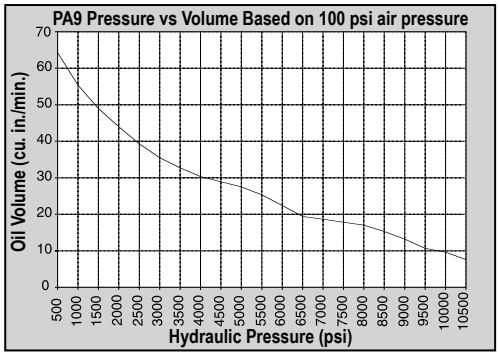

PA9 Foot Control



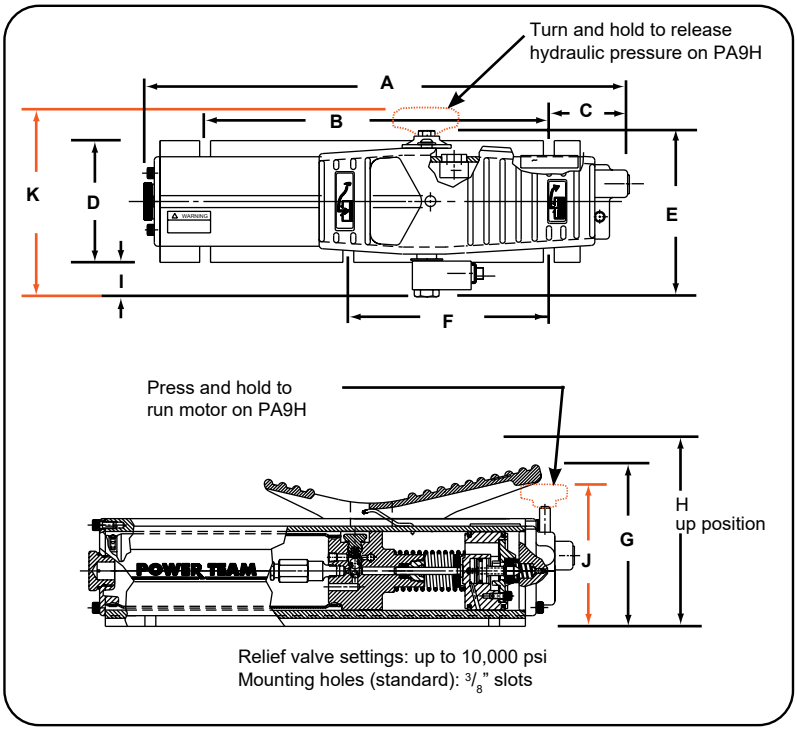

Technical Dimensions

Order No.	A	B	C	D	E	F	G	H	I	J	K
	(in.)	(in.)	(in.)	(in.)	(in.)	(in.)	(in.)	(in.)	(in.)	(in.)	(in.)
PA9	16.94	12.00	2.81	4.25	5.31	7.00	5.83	7.00	1.13	—	—
PA9H	16.94	12.00	2.81	4.25	—	7.00	—	7.00	1.13	4.81	6.69

Ordering Information

For Use With Cyl. Type	Order No.	Air Supply Req'd	Reservoir		Oil Port	Max. Pressure Output	Prod. Wt.
			Oil Cap.	Usable Oil Cap.			
		(psi)	(cu. in.)	(cu. in.)	(in.)	(psi)	(lbs.)
Single-Acting	PA9	40-120	35.00	33.50	3/8 NPTF	10,000	15.00
Single-Acting	PA9H	40-120	35.00	33.50	3/8 NPTF	10,000	15.00

PA60 SERIES

TWO-SPEED, SINGLE AND DOUBLE-ACTING, AIR PUMP 6 CU. IN. / MIN.

Power Team

Model Shown:
PA64



Features

TWO-SPEED PUMP FOR RAPID OIL DELIVERY AT LOW PRESSURE QUICKLY ADVANCES CYLINDER OR TOOL.

- Equipped with air pressure regulator, air filter and lubricator.
- Serviceable air motor for economical repair.
- Internal relief valve protects circuit components.
- Permanently vented reservoir cap.

Typical Set-Up

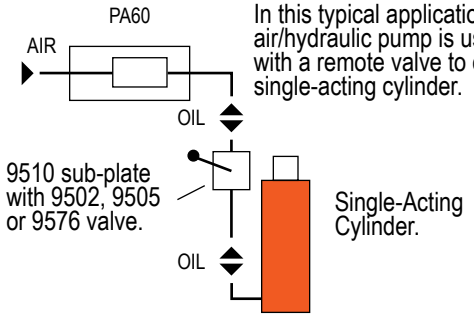

In this typical application an air/hydraulic pump is used with a remote valve to drive a single-acting cylinder.

The PA60 used in a work-holding environment



Performance Specifications

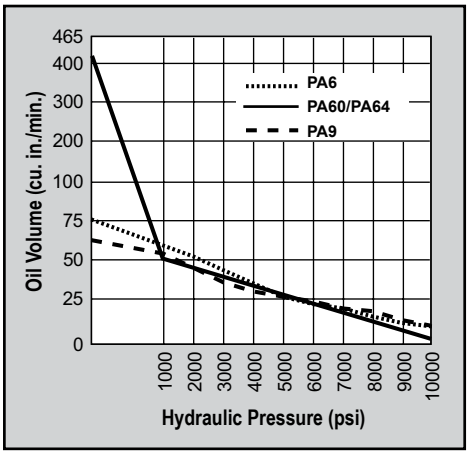

Model Shown:
PA60



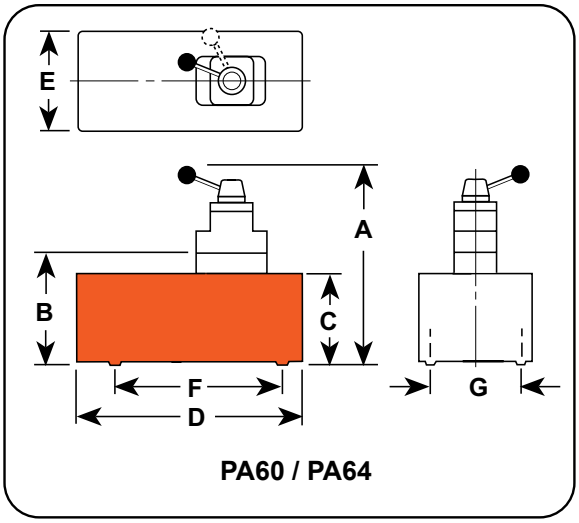

PA60 / PA64

Technical Dimensions

Order No.	A	B	C	D	E	F	G	Max. Pressure Output	Oil Del. (cu. in./min. @) *				
									0	100	1,000	5,000	10,000
	(in.)	(in.)	(in.)	(in.)	(in.)	(in.)	(in.)	(psi)	(psi)	(psi)	(psi)	(psi)	(psi)
PA60	—	9.44	8.13	14.25	9.63	7.13	5.13	10,000	360	350	50	12	6
PA64	14.25	—	8.13	14.25	9.63	7.13	5.13	10,000	390	350	50	12	6

* Typical delivery. Actual flow will vary with field conditions.

Technical Specifications

Description	Order No.	Valve No.	Valve Function	Air Supply Req'd	Reservoir		Oil Port	Prod. Wt.
					Oil Cap.	Usable Oil Cap.		
				(psi)	(cu. in.)	(cu. in.)	(in.)	(lbs.)
For use with remote valves.	PA60	9626 Manifold	—	40-120	2.00	425.00	3/8 NPTF	54.00
For use with single or double-acting cylinders	PA64	9507 3/4-Way	Advanced Hold Return	40-120	2.00	425.00	3/8 NPTF	56.00

PA50 SERIES

SINGLE-SPEED, SINGLE AND DOUBLE-ACTING, AIR PUMP 28 CU. IN. / MIN.

Power Team

Model Shown:

PA50D, PA50M, PA50R2





Features

SINGLE-SPEED, LOW PRESSURE (3,200 PSI) OUTPUT PUMPS.

- Serviceable air motor for economical repair.
- Air inlet filter protects air motor.
- Filter in outlet port protects against contaminated systems.
- Assorted reservoirs to suit your application's requirements.

The PA50 used in a work-holding environment



Performance Specifications

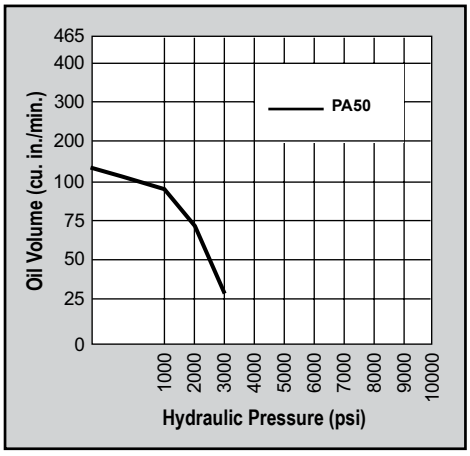

Hydraulic Hoses

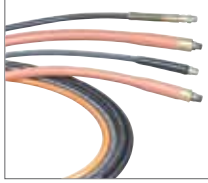

Heavy-duty and thermo plastic hydraulic hoses to meet your requirements and safety factor.

Refer to the accessories section for details.

Analog Gauges



Improve your system visibility and safety by adding an inline hydraulic gauge to your circuit.

9440 (2.5 in.), **9052** (4 in.), and **9089** (6 in.)

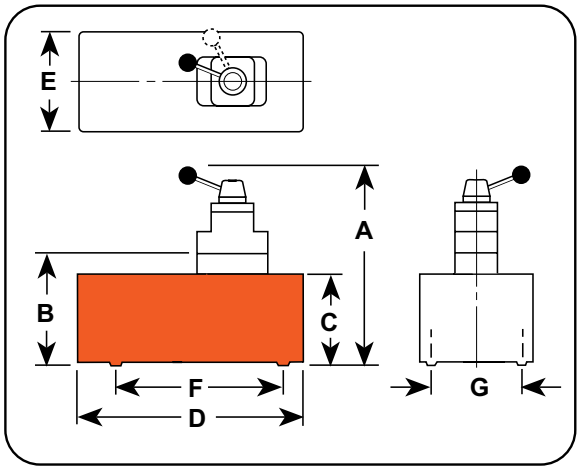

Technical Dimensions

Order No.	A	B	C	D	E	F	G	Max. Pressure Output	Oil Del. (cu. in./min. @) *			
									0	100	1,000	3,200
	(in.)	(in.)	(in.)	(in.)	(in.)	(in.)	(in.)	(psi)	(psi)	(psi)	(psi)	(psi)
PA50, PA50R	7.75	5.88	4.38	9.50	5.00	—	4 x 9.00	3,200	128	110	88	28
PA50R2	10.25	8.00	7.00	11.50	9.50	—	5 1/8 x 7.13	3,200	128	110	88	28
PA50D	10.38	5.88	4.38	9.50	5.00	9.00	4.00	3,200	128	110	88	28

* Typical delivery. Actual flow will vary with field conditions.

Ordering Information

For Use With Cylinder Type	Description	Order No.	Valve No.	Air Supply Req'd	Reservoir		Oil Port	Prod. Wt.
					Oil Cap.	Usable Oil Cap.		
				(psi)	(cu. in.)	(cu. in.)	(in.)	(lbs.)
Single-Acting	Base model pump with high density polyethylene reservoir.	PA50	—	40-120	105	98	3/8 NPTF	14.20
Single-Acting	PA50 pump with 12 foot remote control and polyethylene reservoir.	PA50R	—	40-120	105	98	3/8 NPTF	18.50
Single-Acting	PA50R with 2 gallon polyethylene reservoir.	PA50R2	—	40-120	2 gal.	454	3/8 NPTF	28.50
Single and Double-Acting	PA50 pump with valve and polyethylene reservoir.	PA50D	9504 3-way / 4-way	40-120	105	98	3/8 NPTF	18.40

Notes: Air inlet port 1/4" NPTF. Requires 20 cfm at 100 psi shop air pressure at the pump to achieve 3,200 psi.

Model Shown:
PA172, PA174



Features

ROTARY-STYLE AIR MOTOR. USE WHERE AIR IS THE PREFERRED SOURCE OF ENERGY.

- Two-speed operation for high speed cylinder advance.
- Durable two gallon thermoplastic reservoir. (Metal reservoir conversion kits are available.)
- Air motor capable of starting under full load.

The PA17 used with a flange spreader



Performance Specifications

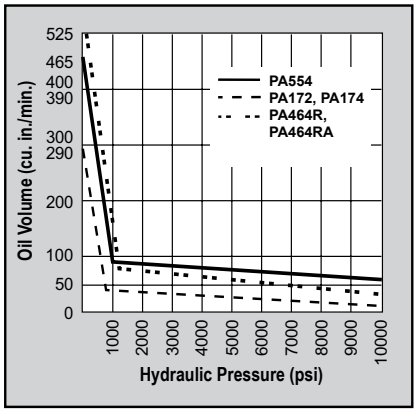

Hydraulic Hoses

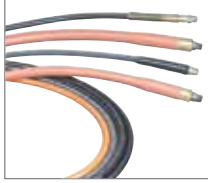

Heavy-duty and thermo plastic hydraulic hoses to meet your requirements and safety factor.

Refer to the accessories section for details.

Hydraulic Fluids



For dependable performance of all your hydraulic pumps and cylinders. Power Team specialty blended oils contains foam suppressant additives and has a high viscosity index. Refer to the Accessories section for complete details

Learn More - About Hydraulic Safety Insight

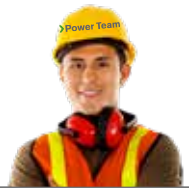

Looking for great safety suggestions? Visit our Resource Section to get a better understanding of hydraulic and mechanical safety insights on what to look for when working around hydraulics

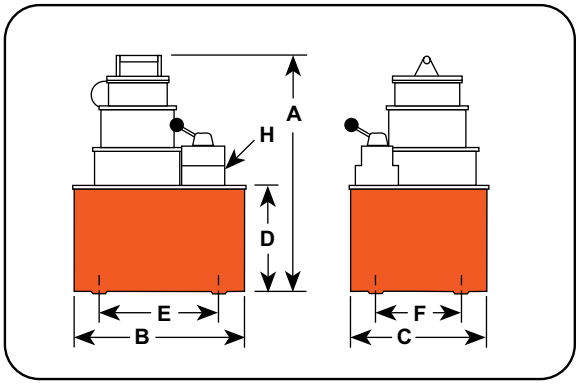

Technical Dimensions

Order No.	A	B	C	D	E	F	H	Max. Pressure Output	Oil Del. (cu. in./min. @) *				
									0	100	1,000	5,000	10,000
	(in.)	(in.)	(in.)	(in.)	(in.)	(in.)	(in.)	(psi)	(psi)	(psi)	(psi)	(psi)	(psi)
PA172	14.13	11.38	9.25	7.00	7.13	5.13	3/8 NPTF	10,000	290	240	24	23	17
PA174	14.13	11.38	9.25	7.00	7.13	5.13	3/8 NPTF	10,000	290	240	24	23	17

* Typical delivery. Actual flow will vary with field conditions.

Ordering Information

For Use With Cylinder Type	Description	Order No.	Valve No.	Valve Function	Air Supply Req'd (psi)	Reservoir		Prod. Wt. (lbs.)
						Oil Cap. (cu. in.)	Usable Oil Cap. (cu. in.)	
Single-Acting	Base model pump with 2 gallon thermoplastic reservoir.	PA172	9517, 2-way	Advance Return*	40-120	2	295	40.00
Single and Double-Acting	PA172 pump with 2 gallon thermoplastic reservoir, 9500 valve for use with single or double-acting cylinders	PA174	9500, 4-way	Advance Hold Return*	40-120	2	295	41.00

* Holds pressure in advance position when valve motor is shut-off or in return position with motor running. Pump will build pressure when motor is shut-off and oil returns to reservoir.

Notes: Requires 40 cfm at 100 psi shop air pressure at the pump. 85/90 dBA at 10,000 psi.

Model Shown:

PA462, PA464R, PA554



Features

ROTARY-STYLE AIR MOTOR. USE WHERE AIR IS THE PREFERRED SOURCE OF ENERGY.

- 3 hp motor starting under full load.
- Two-speed operation for rapid cylinder advance.
- Models available with full remote control over advance and return, (except PA554).
- Tandem center valve holds the load when pump is shut-off.

Torque Wrench Pumps



For Torque Wrench Pump Configurations, refer to the Tools Section.

PA554 pump and RH2008 Center Hole cylinder used to tension cables.



Performance Specifications

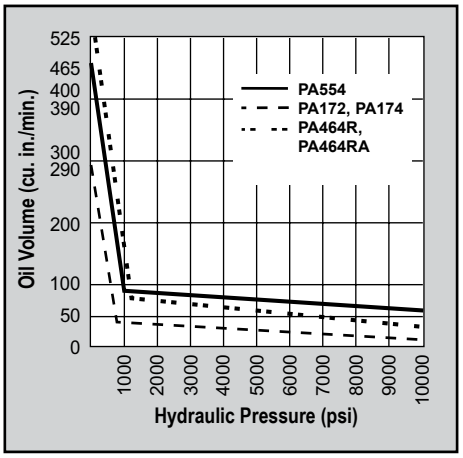

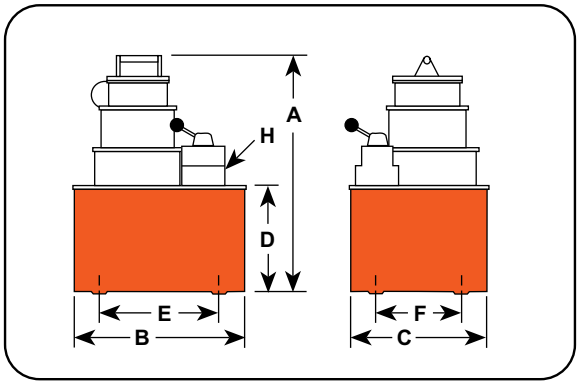

Analog Gauges



Improve your system visibility and safety by adding an inline hydraulic gauge to your circuit.

9440 (2.5 in.), **9052** (4 in.), and **9089** (6 in.)

Technical Dimensions

Order No.	A	B	C	D	E	F	H	Max. Pressure Output	Oil Del. (cu. in./min. @) *				
									0	100	1,000	5,000	10,000
	(in.)	(in.)	(in.)	(in.)	(in.)	(in.)	(in.)	(psi)	(psi)	(psi)	(psi)	(psi)	(psi)
PA462	15.00	11.50	9.50	7.00	10.00	8.00	3/8 NPTF	10,000	465	450	53	51	46
PA464	15.00	11.50	9.50	7.00	10.00	8.00	3/8 NPTF	10,000	465	450	53	51	46
PA464R	15.00	11.50	9.50	7.00	10.00	8.00	3/8 NPTF	10,000	465	450	53	51	46
PA464RA	15.00	11.50	9.50	7.00	10.00	8.00	3/8 NPTF	10,000	465	450	53	51	46
PA554	19.00	11.50	9.50	7.00	10.00	8.00	3/8 NPTF	10,000	465	450	80	70	55

* Typical delivery. Actual flow will vary with field conditions.

Note: Reservoir has four 1/2" - 20 mounting holes.

Ordering Information

For Use With Cylinder Type	Description	Order No.	Valve Number	Valve Function	Air Supply Req'd	Reservoir		Prod. Wt.
						Oil Cap.	Usable Oil Cap.	
					(psi)	(cu. in.)	(cu. in.)	(lbs.)
Single-Acting	Base model pump with 2.5 gallon steel reservoir.	PA462	9584, 2-way	Advance/ Hold/ Return	40-120	2.5	590	60.00
Single and Double-Acting	PA462 pump with 9500 valve capable of running 2 single-acting cylinders or one double-acting cylinder.	PA464	9500, 4-way	Advance/ Hold/ Return*	40-120	2.5	590	61.00
Single and Double-Acting	PA462 pump with air actuated valve for full remote control over advance and return. Includes 12 ft. remote control.	PA464R†	9594, 4-way	Advance/ Hold/ Return	40-120	2.5	590	78.00
Single and Double-Acting	PA464R pump with automatic dump feature. Includes 25 ft. remote control.	PA464RA**†	9594, 4-way	Advance/ Hold/ Return*	40-120	2.5	590	79.00
Single and Double-Acting	High-performance pump with 2.5 gallon steel reservoir.	PA554	9500, 4-way	Advance/ Hold/ Return*	40-120	2.5	525	72.00

* Holds when motor is shut-off and valve is in "advance" position.

Notes: Requires 50 cfm at 80 psi shop air pressure at the pump.
85/90 dBA at 10,000 psi.

** Not to be used for lifting.

† The PA464RA has an "automatic dump" feature. Pressure is not held when operator releases "advance" or "return" button. PA464R will "hold" only in the "advance" position with the motor shut-off.

Model Shown:

PB102-1, PB102P-1



Features

COMPACT, PORTABLE, CORDLESS HYDRAULIC PUMP FOR MRO APPLICATIONS.

- Compact, Li-ion 18VDC, 8.0 Ah battery-powered pump provides extended run-time.
- Two-stage, high-pressure hydraulic pump offers quick tool advancement in the first stage.
- Extremely compact, lightweight with an ergonomic handle grip and transport strap to ease portability.
- Self-contained, rubber bladder reservoir allows pump usage in most positions with an impressive capacity of 52 cu. in. usable.
- Quiet, smooth-running, serviceable brushed 18VDC motor.
- High-impact, fiberglass reinforced shroud protects your investment in the most demanding and harsh applications.
- Interchangeable valve configuration accommodates a vast array of applications.
- CSA rated for intermittent duty, CE compliant.

Ordering Information

Order No.	Description	Refer to Note	Tool Type	Valve Type	Valve Function	Remote Control
PB102-0	18VDC Power Pump SA 2-Way Auto-Dump NO Charger	(1)	SA	2-Way Hold/Auto Dump (9561)	Advance/Return	Optional
PB102P-0	18VDC Power Pump SA 2-Way Auto-Dump w/Pendent NO Charger	(1)	SA	2-Way Hold/Auto Dump (9561)	Advance/Return	Included Pendant with 10 ft. cord
PB102R-0	18VDC Power Pump SA 2-Way Auto-Dump Pressure Reg. NO Charger	(1), (3)	SA	2-Way Hold/Auto Dump w/ Pressure Regulator (9561, 9560)	Advance/Return Pressure Adjustment 1-10K	Optional
PB102A-0	18VDC Power Pump SA Auto-Dump NO Charger	(2)	SA	2-Way Auto Dump (9562)	Advance/Return (Auto)	Optional
PB104-0	18VDC Power Pump DA 4-Way NO Charger	(4)	DA	4-Way (9563)	Advance/Hold/Return	Optional
PB102-CP	18VDC Power Pump SA 2-Way Auto-Dump w/Popper	(2), (5)	SA	2-Way Dump w/ Pop Off RV (3001123)	Advance/Auto Return	Optional
PB102-1	18VDC Power Pump SA 2-Way Auto-Dump US Charger	(1)	SA	2-Way Hold/Auto Dump (9561)	Advance/Return	Optional
PB102P-1	18VDC Power Pump SA 2-Way Auto-Dump w/Pendent US Charger	(1)	SA	2-Way Hold/Auto Dump (9561)	Advance/Return	Included, Pendant with 10 ft. cord
PB102R-1	18VDC Power Pump SA 2-Way Auto-Dump Pressure Reg. US Charger	(1), (3)	SA	2-Way Hold/Auto Dump w/Pressure Regulator (9561, 9560)	Advance/Return Pressure Adjustment 1-10K	Optional
PB102A-1	18VDC Power Pump SA Auto-Dump US Charger	(2)	SA	2-Way Auto Dump (9562)	Advance/Return (Auto)	Optional
PB104-1	18VDC Power Pump DA 4-Way US Charger	(4)	DA	4-Way (9563)	Advance/Hold/Return	Optional
PB102-2	18VDC Power Pump SA 2-Way Auto-Dump EU Charger	(1)	SA	2-Way Hold/Auto Dump (9561)	Advance/Return	Optional
PB102P-2	18VDC Power Pump SA 2-Way Auto-Dump w/Pendent EU Charger	(1)	SA	2-Way Hold/Auto Dump (9561)	Advance/Return	Included Pendant with 10 ft. cord
PB102R-2	18VDC Power Pump SA 2-Way Auto-Dump Pressure Reg. EU Charger	(1), (3)	SA	2-Way Hold/Auto Dump w/Pressure Regulator (9561, 9560)	Advance/Return Pressure Adjustment 1-10K	Optional
PB102A-2	18VDC Power Pump SA Auto-Dump EU Charger	(2)	SA	2-Way Auto Dump (9562)	Advance/Return (Auto)	Optional
PB104-2	18VDC Power Pump DA 4-Way EU Charger	(4)	DA	4-Way (9563)	Advance/Hold/Return	Optional

(1) 2-Way Auto Dump Function: Flapper handle in "hold" position will allow the tool to advance and maintain pressure when the motor is shut-off, flapper handle must be switched back to retract and dump pressure. Flapper handle is set to "return" position, power on will advance tool and power-off will retract tool and dump pressure.
(2) Auto Dump Function: Power on - tool advances, and power-off - tool returns, releasing pressure to tank.
(3) Using the external knob, the pressure regulator valve allows the operator to externally adjust the pressure on demand, ranges from 500 - 10,000 psi.
(4) Four-way valve direction is controlled by the handle lever. Three position; Advance, hold, retract.
(5) For crimping applications only. Once full pressure is reached, RV provides audible noise.
SA = Single-Acting DA = Double-Acting

Technical Dimensions

Top View

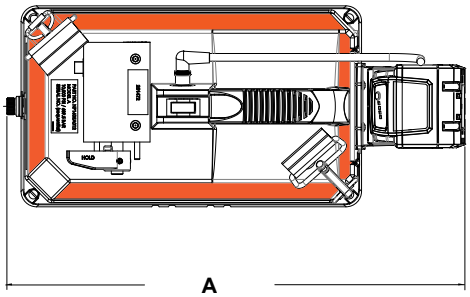

Rear Side View

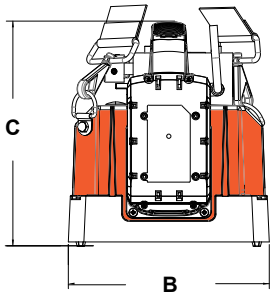

Optional Remotes

These remotes are equipped with connectors to enable the operator to “plug and play” the connection quickly. The wiring is configured to allow the operator to use the power switch on the pump or operate remotely once connected.



Hand Switch

Order # 3000989

Foot Pendant

Order # 3000975

Hardware Included



Turnkey, 10,000 PSI (690 bar) hydraulic power pump powered by an 18VDC Li-Ion battery, ships with hydraulic oil.



Transport shoulder strap with clips installed on shroud for quick fastening or removal.



One 18VDC Li-Ion 8.0 Ah Battery, additional batteries can be purchased separately.



18VDC battery charger available in 115VAC or 230VAC for certain models, excludes all -0 models

Flow @ Stages (cu. in.)	Usable Oil Capacity (cu. in.)	Battery Included	Charger (w/plug style)	Dimension A Length (in.)	Dimension B Width (in.)	Dimension C Height (in.)	Prod. Weight (lbs.)	Order No.
1st Stage: 200 @ 200 psi 2nd Stage: 11 @ 10,000 psi	52	(1) One 18VDC Li-Ion 8.0 Ah	No charger is included	17.23	7.56	8.45	24	PB102-0
				17.23	7.56	8.45	26	PB102P-0
				17.23	7.56	9.52	25	PB102R-0
				17.23	7.56	7.56	24	PB102A-0
				17.23	7.56	10.20	25	PB104-0
				17.23	7.56	8.45	25	PB102-CP
1st Stage: 200 @ 200 psi 2nd Stage: 11 @ 10,000 psi	52	(1) One 18VDC Li-Ion 8.0 Ah	(1) One 115VAC M18 Charger (US Plug) 	17.23	7.56	8.45	24	PB102-1
				17.23	7.56	8.45	26	PB102P-1
				17.23	7.56	9.52	25	PB102R-1
				17.23	7.56	7.56	24	PB102A-1
				17.23	7.56	10.20	25	PB104-1
1st Stage: 200 @ 200 psi 2nd Stage: 11 @ 10,000 psi	52	(1) One 18VDC Li-Ion 8.0 Ah	(1) One 230VAC M18 Charger (EU Plug) Europe Only	17.23	7.56	8.45	24	PB102-2
				17.23	7.56	8.45	26	PB102P-2
				17.23	7.56	9.52	25	PB102R-2
				17.23	7.56	7.56	24	PB102A-2
				17.23	7.56	10.20	25	PB104-2

PE10 SERIES

TWO-SPEED, SINGLE AND DOUBLE-ACTING, ELECTRIC/BATTERY PUMP, QUARTER HORSE®, 60 CU. IN. / MIN.

Power Team

Model Shown:
PE104, PR104



Features

HIGH-PERFORMANCE IN A COMPACT PACKAGE. ELECTRIC AND BATTERY POWERED MODELS FOR POWERING TOOLS AND CYLINDERS UP TO 25 TON.

- Portable power source for hydraulic cylinders and tools.
- Permanent magnet motor starts easily under load, even with reduced voltage conditions.
- Battery-operated models have 8 foot power cord with alligator clips to connect to any 12VDC battery.
- Optional rechargeable battery pack with shoulder strap for maximum portability.
- Pump typically delivers 15 minutes of continuous operation at 10,000 psi on a single battery.
- Pump can be operated in any position.
- 24VDC hand and foot switches available for all AC powered models.
- High-impact housing with flame–retardant construction.
- Base mounting holes for fixed installations.
- CSA rated for intermittent duty.

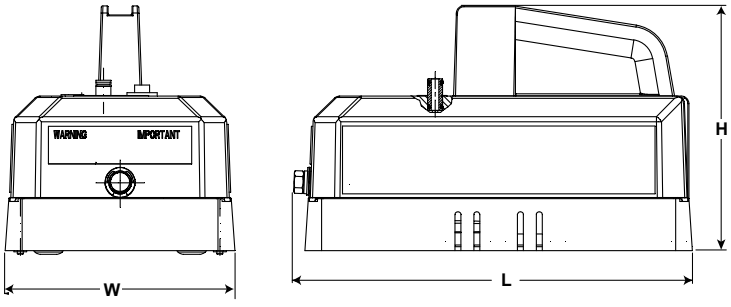

Performance Specifications

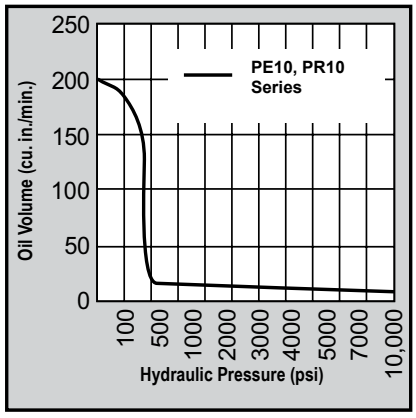

Technical Dimensions

Order No.	Max. Pressure Output (psi)	dBA at Idle and 10,000 (psi)	Oil Del. (cu. in./min. @) 0-40 (psi)	Oil Del. (cu. in./min. @) 10,000 (psi)	Overall Dimensions Length (in.)	Overall Dimensions Width (in.)	Overall Dimensions Height (in.)	Prod. Wt. with Oil (lbs.)
PE10 Series PR10 Series	10,000	68-74 *	120	10	13.00	7.75	8.00	20.00

* Measured at 3 ft. distance, all sides.

Accessories



BP212VQ – Optional 12VDC battery pack. Includes sealed lead acid battery, 115VAC charger, 4 ft. cord, carrying case and shoulder strap. Wt., 17.7 lbs.

BP12INT – Battery with cord and carrying case. Wt., 11.1 lbs.

RC12V – Replacement 4 ft. battery cord only. Wt., 0.5 lbs.

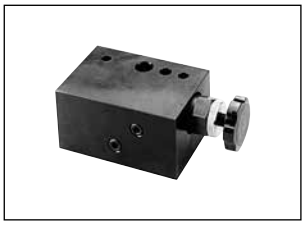

9560 – Pressure regulator. Adjustable from 1,000 to 10,000 psi. All mounting hardware included. Wt., 3.0 lbs.

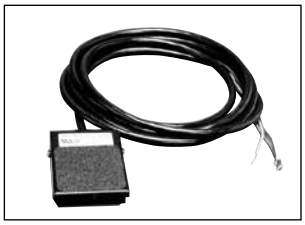

251660 – Foot switch with 10 ft. cord. Single pole, double throw, 15 amp @ 125-250VAC. Wt., 1.0 lb.

NOTE: PR10 rechargeable model is equipped with 8 ft. cord with alligator clips. Order optional battery pack (No. BP212VQ) or use with any 12VDC battery.

NOTE: Amp draw at 10,000 psi – 6 amp at 115VAC, 3 amp at 230VAC, and 35 amp at 12VDC.

The Quarter Horse pump has a maximum operating pressure of 10,000 psi, which handles a wide variety of hand-held hydraulic tools.



Ordering Information

Order No.	For Use With Cylinder Type	Description	Valve Type	Valve No.	Valve Function	Control Switch	Motor	Reservoir Usable Oil Cap. (cu. in.)
PE102	Single-Acting	1/4 hp motor. Bladder type reservoir, 110VAC power required.	2-Way/ Auto Dump	9561	Advance Return (Auto.)*	Rocker Type off, Momentary on	1/4 hp, 110/115VAC 50/60 Hz, Single-Phase	60
PE102A	Single-Acting	1/4 hp motor. Bladder type reservoir, 110VAC power required, automatic dump valve.	Auto. Dump	9562	Advance Return**	Rocker Type off, Momentary on	1/4 hp, 110/115VAC 50/60 Hz, Single-Phase	60
PE102-220	Single-Acting	1/4 hp motor. Bladder type reservoir, 220VAC power required.	2-Way/ Auto. Dump	9561	Advance Return (Auto.)*	Rocker Type off, Momentary on	1/4 hp, 110/115VAC 50/60 Hz, Single-Phase	60
PE102A-220	Single-Acting	1/4 hp motor. Bladder type reservoir, 220VAC power required, automatic dump valve.	Auto. Dump	9562	Advance Return**	Rocker Type off, Momentary on	1/4 hp, 220/230VAC 50/60 Hz, Single-Phase	60
PR102	Single-Acting	1/4 hp motor. Bladder type reservoir, 12VDC power required.	2-Way/ Auto. Dump	9561	Advance Return (Auto.)*	Rocker Type off, Momentary on	1/4 hp, 12VDC†	60
PR102A	Single-Acting	1/4 hp motor. Bladder type reservoir, 12VDC power required, automatic dump valve.	Auto. Dump	9562	Advance Return**	Rocker Type off, Momentary on	1/4 hp, 12VDC†	60
PE104	Single-Acting, Double-Acting	Base model pump has 4-way valve for operating double-acting systems. 110VAC power required.	4-Way	9563	Advance Hold Return	Rocker Type off, Momentary on	1/4 hp, 110/115VAC 50/60 Hz, Single-Phase	60
PE104-220	Single-Acting, Double-Acting	PE104 pump has 4-way valve for operating double-acting systems. 220VAC power required.	4-Way	9563	Advance Hold Return	Rocker Type off, Momentary on	1/4 hp, 220/230VAC 50/60 Hz, Single-Phase	60
PR104	Single-Acting, Double-Acting	PE104 pump has 4-way valve for operating double-acting systems. 12VDC power required.	4-Way	9563	Advance Hold Return	Rocker Type off, Momentary on	1/4 hp, 12VDC†	60

* Advance position holds pressure with motor shut-off. Return position advances cylinder with motor running and returns cylinder with motor shut-off.

** Cylinder advances with motor running and automatically returns with motor shut-off.

† Comes with an 8 ft. alligator clip cord for 12VDC use.

PE17 SERIES

TWO-SPEED, SINGLE AND DOUBLE-ACTING, ELECTRIC PUMP, 17 CU. IN. / MIN.

Power Team

Model Shown:
PE172



Features

FOR MAINTENANCE AND CONSTRUCTION APPLICATIONS.

- For use with single or double-acting cylinders at operating pressure up to 10,000 psi.
- Equipped with 1/2 hp, 3,450 rpm, single-phase, thermal protected induction motor; 10 ft. remote control cord (PE172S has 25 ft. cord)
- Low amperage draw; small generators and low amperage circuits can be use as power source.
- Extremely quiet noise level (67-81 dBA).
- Starts under full load for intermittent duty.

Hydraulic Hoses

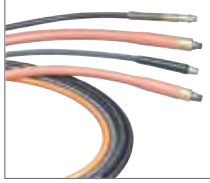

Heavy-duty and thermo plastic hydraulic hoses to meet your requirements and safety factor.

Refer to the accessories section for details.

Performance Specifications

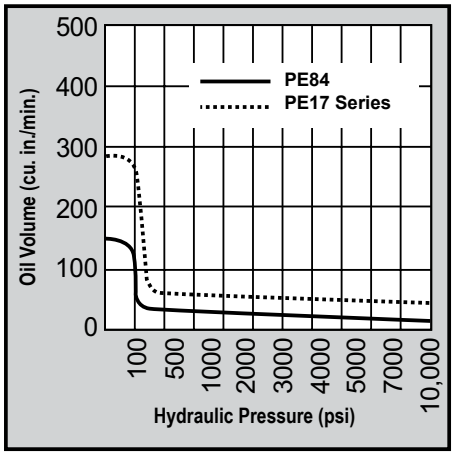

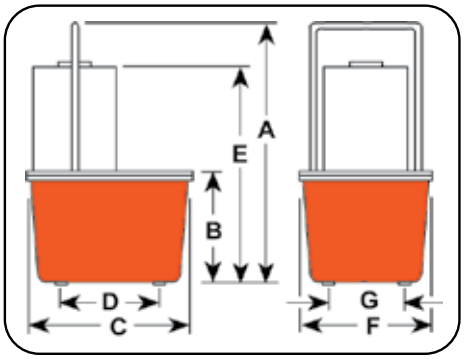

Technical Dimensions

Order No.	A	B	C	D	E	F	G	Max. Pressure Output	rpm	dBA at Idle and 10,000	Amp Draw 115 V - at 10,000	Oil Del. (cu. in./min. @)				Prod. Wt. with Oil
												0	100	5,000	10,000	
	(in.)	(in.)	(in.)	(in.)	(in.)	(in.)	(in.)	(psi)		(psi)	(psi)	(psi)	(psi)	(psi)	(psi)	(lbs.)
PE17 Series	18.50	7.00	11.38	7.13	14.88	9.25	5.13	10,000	3,450	67/81*	10	290	190	20	16	45.00
PE17M Series	18.13	6.63	11.50	—	14.50	9.50	—	10,000	3,450	67/81*	10	290	190	20	16	53.00
PE84 Series	18.50	7.00	11.38	7.13	15.38	9.25	5.13	10,000	1,750	67/81*	10	145	120	12	8	47.00

* PE84 is the same as the PE174, except has continuous duty with 2 gallon thermoplastic reservoir and features 1,750 RPM

Ordering Information

For Use With Cylinder Type	Description	Order No.	Valve Type	Valve No.	Valve Function	Control Switch ††	Motor	Reservoir Usable Oil Cap. (cu. in.)
Single-Acting	1/2 hp pump with 2 gallon thermoplastic reservoir.	PE172 †††	2-Way	9517	Advance Return (Auto†)	Remote Motor Control (10 ft.) on/off	1/2 hp, 110/115VAC* 50/60 Hz, Single-Phase	295
Single-Acting	1/2 hp pump with 2.5 gallon aluminum reservoir.	PE172M †††	2-Way	9517	Advance Return (Auto†)	Remote Motor Control (10 ft.) on/off	1/2 hp, 110/115VAC* 50/60 Hz, Single-Phase	375
Single-Acting	1/2 hp pump with 2 gallon thermoplastic reservoir, solenoid-operated valve.	PE172S	3-Way	9579	Advance Hold Return	Remote Motor & Valve (25 ft.)	1/2 hp, 110/115VAC 50/60 Hz, Single-Phase	295
Single-Acting	1/2 hp pump with 2 gallon aluminum reservoir, solenoid-operated valve.	PE172SM	3-Way	9579	Advance Hold Return	Remote Motor & Valve (25 ft.)	1/2 hp, 110/115VAC 50/60 Hz, Single-Phase	375
Single-Acting	Best suited for crimping, punching, pressing. Not for lifting. Thermoplastic reservoir.	PE172A †††∞	Auto./Dump Manifold	45554	Advance Return	Remote Motor Control (10 ft.) on/off	1/2 hp, 110/115VAC 50/60 Hz, Single-Phase	295
Single-Acting	Best suited for crimping, punching, pressing. Not for lifting. Aluminum reservoir.	PE172AM †††∞	Auto./Dump Manifold	45554	Advance Return	Remote Motor Control (10 ft.) on/off	1/2 hp, 110/115VAC* 50/60 Hz, Single-Phase	375
Single-Acting, Double-Acting	1/2 hp pump with 2 gallon thermoplastic reservoir, 9500 double-acting valve.	PE174 †††	4-Way	9500	Advance Hold Return**	Remote Motor Control (10 ft.) on/off	1/2 hp, 110/115VAC* 50/60 Hz, Single-Phase	295
Single-Acting, Double-Acting	1/2 hp pump with 2 gallon aluminum reservoir, 9500 double-acting valve.	PE174M †††	4-Way	9500	Advance Hold Return**	Remote Motor Control (10 ft.) on/off	1/2 hp, 110/115VAC* 50/60 Hz, Single-Phase	375
Single- or Multi Double-Acting	1/2 hp pump, continuous duty with 2 gallon thermoplastic reservoir, 9500 double-acting valve.	PE84	4-Way	9500	Advance Hold Return**	Remote Motor Control (10 ft.) on/off	1/2 hp, 115VAC* 60 Hz, Single-Phase	295

* Available with 220VAC 50Hz motor (to order, place suffix "50-220" behind pump order number).

** Advance position holds pressure with motor shut-off.

† Advance position holds pressure with motor shut-off. Return position advances cylinder with motor running and returns cylinder with motor shut-off.

†† The remote motor control switch on 220VAC 50Hz cycle PE17 series pumps is 24VDC.

††† CSA Compliant

‡ Some Power Team pumps are available in special configurations not listed in this catalog. For your special requirements please consult your local distributor or the Power Team factory.

∞ Not to be used for lifting.

NOTE: Usable oil is calculated with the oil fill at the recommended level of 1.50" below reservoir cover plate.

NOTE: Contact Factory for special 12VDC version for service vehicles

PE18 SERIES

TWO-SPEED, SINGLE AND DOUBLE-ACTING, ELECTRIC PUMP, VANGUARD JR.®SERIES, 18 CU. IN. / MIN.

Power Team

Model Shown:

PE182, PE183-2, PE183C



Features

IDEAL FOR USE WITH SMALL HYDRAULIC POWER TOOLS.

- Vanguard Jr.® pumps provide two-speed high-performance in a light-weight, compact package.
- Gauge port provided on pump. Metal reservoir on all models.
- Equipped with a 1⁄2 hp, 115VAC, 60/50 Hz single-phase motor that starts under load, even at reduced voltage.
- Low amperage draw permits use with smaller generators and low amperage circuits.
- All pumps have a 10 foot remote control (PE183C has 25 foot remote control).
- Noise level of 85-90 dBA.
- CSA rated for intermittent duty.

For operating hydraulic crimping, cutting or other tools:

- **PE183C** - For crimping or pressing applications. Has special electrical circuitry to pulse/advance, hold at full pressure, build to a predetermined pressure, release and reset circuit. Features separate emergency return switch.
- **PE184C** - Allows operator to alternately operate a spring-return cutting and/or crimping tool without disconnecting either tool. Select port connection with manual 4-way valve, start pump with remote control hand switch and extend connected tool. When hand switch is switched to off, pump stops and automatic valve opens, allowing tool to return. In center (neutral) position, manual control valve holds tool in position at time valve is shifted.

Performance Specifications

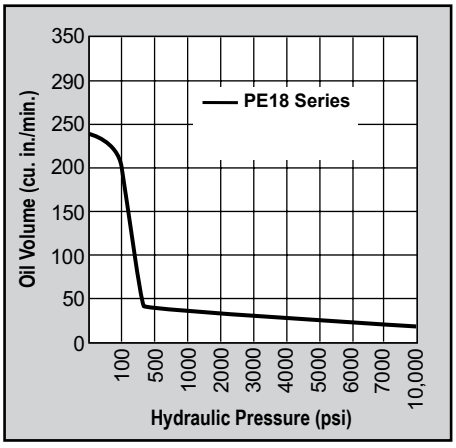

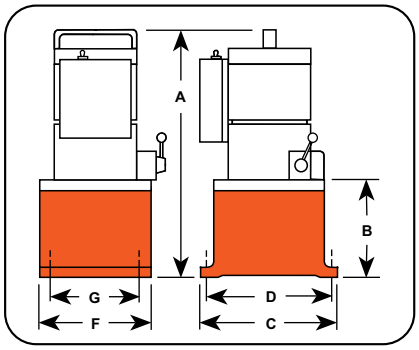

Technical Dimensions

Order No.	A	B	C	D	F	G	Max. Pressure Output	rpm	dBA at Idle and 10,000	Amp Draw 115VAC at 10,000	Oil Del. (cu. in./min. @) †				Prod. Wt. with Oil
											0	100	5,000	10,000	
	(in.)	(in.)	(in.)	(in.)	(in.)	(in.)	(psi)		(psi)	(psi)	(psi)	(psi)	(psi)	(psi)	(lbs.)
PE182	16.00	4.75	8.00	7.13	6.00	5.13	10,000	12,000	85/90**	10.2 Amps	230	190	25	18	30.00
PE183	16.00	4.75	8.00	7.13	6.00	5.13	10,000	12,000	85/90**	10.2 Amps	230	190	25	18	30.00
PE183A	16.00	4.75	8.00	7.13	6.00	5.13	10,000	12,000	85/90**	10.2 Amps	230	190	25	18	30.00
PE184	16.00	4.75	8.00	7.13	6.00	5.13	10,000	12,000	85/90**	10.2 Amps	230	190	25	18	30.00
PE183-2*	18.50	7.25	11.50	10.00	9.50	8.00	10,000	12,000	85/90**	10.2 Amps	230	190	25	18	42.00
PE184-2*	18.50	7.25	11.50	10.00	9.50	8.00	10,000	12,000	85/90**	10.2 Amps	230	190	25	18	42.00
PE183C ††	16.00	4.75	8.00	7.13	6.00	5.13	10,000	12,000	85/90**	10.2 Amps	230	190	25	18	30.00
PE184C ††	16.00	4.75	8.00	7.13	6.00	5.13	10,000	12,000	85/90**	10.2 Amps	230	190	25	18	30.00

* 2.5 gal. reservoir.

** Measured at 3 ft. distance, all sides.

† Typical delivery. Actual flow will vary with field conditions.

†† Special application pumps for cutting, crimping or pressing.

Ordering Information

For Use With Cylinder Type	Description	Order No.	Valve Type	Valve Function	Control Switch	Motor	Reservoir Usable Oil Cap. (cu. in.)
Single-Acting	1/2 hp pump with 2-Way valve and 0.5 gallon reservoir.	PE182	2-Way	Advance Return†	Remote Motor Control (10 ft.) on/off	1/2 hp, 110/115VAC** 50/60 Hz, A.C., Single-Phase	104
Single-Acting	1/2 hp pump with 3-Way valve and 0.5 gallon reservoir.	PE183	3-Way	Advance Hold Return	Remote Motor Control (10 ft.) on/off	1/2 hp, 110/115VAC** 50/60 Hz, A.C., Single-Phase	104
Single-Acting	1/2 hp pump with 3-Way valve and 2 gallon reservoir.	PE183-2	3-Way	Advance Hold Return	Remote Control (10 ft.)	1/2 hp, 110/115VAC** 50/60 Hz, A.C., Single-Phase	525††
Single-Acting	1/2 hp pump with dump valve and 0.5 gallon reservoir.	PE183A∞	Auto./Dump Pump	Advance Return	Remote (10 ft.)	1/2 hp, 110/115VAC** 50/60 Hz, A.C., Single-Phase	104
Single-Acting	Special crimping pump.	PE183C∞	Special, for crimping only	Advance Hold Return†	Remote Motor Control (25 ft.) on/off	1/2 hp, 110/115VAC** 50/60 Hz, A.C., Single-Phase	104
Single-Acting, Double-Acting	1/2 hp pump for double-acting systems with 0.5 gallon reservoir.	PE184	4-Way	Advance Hold Return	Remote Motor Control (10 ft.) on/off	1/2 hp, 110/115VAC** 50/60 Hz, A.C., Single-Phase	104
Single-Acting, Double-Acting	1/2 hp pump for double-acting systems with 2 gallon reservoir.	PE184-2	4-Way	Advance Hold Return†	Remote Motor Control (10 ft.) on/off	1/2 hp, 110/115VAC** 50/60 Hz, A.C., Single-Phase	525††
Single-Acting, Double-Acting	Special crimping pump.	PE184C*	4-Way	Advance Return	Remote Control (10 ft.) on/off	1/2 hp, 110/115VAC** 50/60 Hz, A.C., Single-Phase	104

* Also for use with special single-acting cylinder applications.

** Available with 220VAC, 60/50 Hz motor (to order, place suffix "50-220" behind pump order number). Specify voltage when ordering.

† Holds when motor is shut-off and valve is in "advance" position.

†† Pumps supplied with 2 gallon oil (usable oil is 355 cu. in.), will hold 2.50 gallon when filled to within 1.50" below reservoir cover plate.

∞ Not to be used for lifting.

Model Shown:

PE213, PE214, PE214S



Features

IDEAL FOR USE WITH SMALL MEDIUM HYDRAULIC POWER TOOLS.

- Totally enclosed, fan cooled induction motor: 1 hp, 1,725 rpm, 60 Hz, single-phase. Thermal overload protection.
- Remote control, with 10 foot cord is standard on pumps with solenoid valves. Manual valve pumps have “Stop”, “Start” and “Run/Off/Pulse” switches.
- Pump controls are moisture and dust resistant.
- Motor drip cover with carrying handles and lifting lug.
- Low noise level of 70 dBA@10,000 psi.
- In the event of electrical interruption, pump shuts off and will not start up until operator presses the pump start button.
- Units with remote have a 24VAC control circuit that provides additional user/operator safety.
- CSA rated for intermittent duty.

PE21 series pump and RD5513 cylinder used in a special press that produces pharmaceutical-grade extracts for herbal medicines.



Performance Specifications

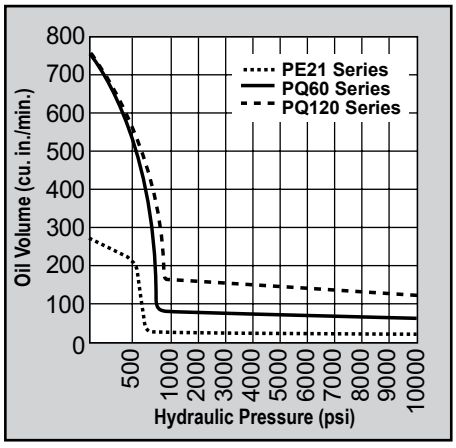

Learn More - About Hydraulic Safety Insight

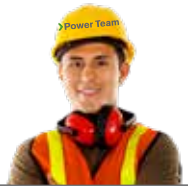

Looking for great safety suggestions? Visit our Resource Section to get a better understanding of hydraulic and mechanical safety insights on what to look for when working around hydraulics.

Optional Cylinders

Power Team offers a wide variety of single-acting, double-acting, lock nut, pancake and center hole cylinders to meet your requirements.



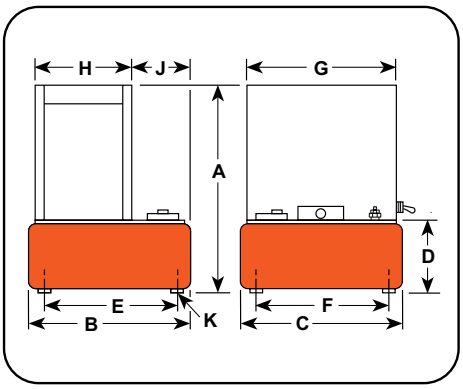

Technical Dimensions

Order No.	A	B	C	D	E	F	G	H	J	K**	Max. Pressure Output	rpm	dBA at Idle and 10,000	Oil Del. (cu. in./min. @)				Prod. Wt. † with Oil
														100	1000	5,000	10,000	
	(in.)	(in.)	(in.)	(in.)	(in.)	(in.)	(in.)	(in.)	(in.)	(in.)	(psi)		(psi)	(psi)	(psi)	(psi)	(psi)	(lbs.)
PE21 Series	21.38	11.50	9.50	6.50	10.00	8.00	14.13	9.50	3.25	1/2-20 UNF	10,000	1,725	70*	270	29	27	22	98.00

** For 2" dia. swivel casters, order (4) No. 10494.

† Shipping weight with manual valve; add 14 lbs. for pump with solenoid valve.

Ordering Information

For Use With Cylinder Type	Description	Order No.	Valve Type	Valve No.	Valve Function	Max. Amp Draw @ 10,000 †† (psi)	Motor	Reservoir Usable Oil Cap. (cu. in.)
Single-Acting	1 hp pump with 2.5 gallon reservoir and manual valve.	PE213	3-Way	9520*	Advance Hold Return	115VAC -15 amps 230VAC -7.5 amps	1 hp, 115/230VAC 60 Hz, Single-Phase	590
Single-Acting	1 hp pump with 2.5 gallon reservoir and solenoid-operated remote valve.	PE213S	3-Way	9599†	Advance Hold Return	115VAC -15 amps 230VAC -7.5 amps	1 hp, 115/230VAC 60 Hz, Single-Phase	590
Double-Acting	1 hp pump with 2.5 gallon reservoir and manual valve.	PE214	4-Way	9506*	Advance Hold Return	115VAC -15 amps 230VAC -7.5 amps	1 hp, 115/230VAC 60 Hz, Single-Phase	590
Double-Acting	1 hp pump with 2.5 gallon reservoir and solenoid-operated remote valve.	PE214S	4-Way	9512†	Advance Hold Return	115VAC -15 amps 230VAC -7.5 amps	1 hp, 115/230VAC 60 Hz, Single-Phase	590

* Manual valve. Pump is equipped with RUN/OFF/PULSE switch for control of motor.

† Solenoid valve. Pump is equipped with a remote control switch with 10 ft. cord.

†† Pre-wired at factory for this voltage. PE21 series available in 230VAC 60Hz or 220VAC 50Hz. Please specify when ordering. Example: for 60Hz order PE213-230; for 50Hz order PE213-50-220.

NOTE: Some Power Team pumps are available in special configurations not listed in this catalog. For your special requirements please consult your local distributor or the Power Team Customer Service.

Model Shown:

PED253, PED254, PED254S



Features

IDEAL FOR RUNNING MULTIPLE TOOLS OR CYLINDERS FROM ONE POWER UNIT. RECOMMENDED FOR CYLINDERS UP TO 75 TONS.

- Two-speed pumps have the same low pressure and high pressure flows from both valves.
- Flows and pressures of each pump are independent.
- Delivers 300 cu. in./min. of oil @ 100 psi and 25 cu. in./min. @ 10,000 psi from each pump.
- 1.5 hp, 110/115VAC, 60 Hz induction motor, 10 foot remote control and 5 gallon steel reservoir.
- Models available for operating single-acting or double-acting cylinders.
- Each power unit contains two separate pumps and two separate valves allowing operator to control multiple processes with one power unit.
- Both pumps on each power unit are equipped with an externally adjustable pressure relief valve.
- Not recommended for frequent starting and stopping.

PED series pump and RD5513 cylinder used in a special press that produces pharmaceutical-grade extracts for herbal medicines.



Performance Specifications

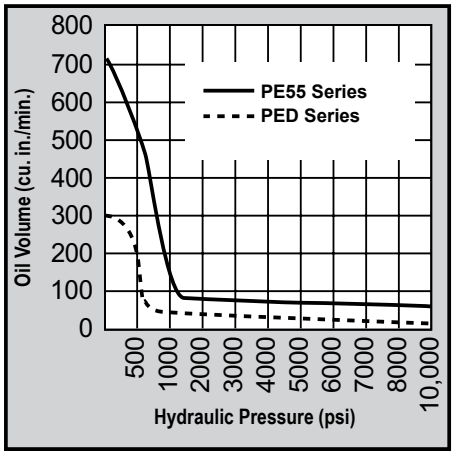

4 Port Control Manifold



For independent multiple-cylinder operation, feature needle valves for precise manual control. Designed for remote-mounted applications.

Ordering Information: **9644**

Hydraulic Fluids



For dependable performance of all your hydraulic pumps and cylinders. Power Team specialty blended oils contains foam suppressant additives and has a high viscosity index. Refer to the Accessories section for complete details

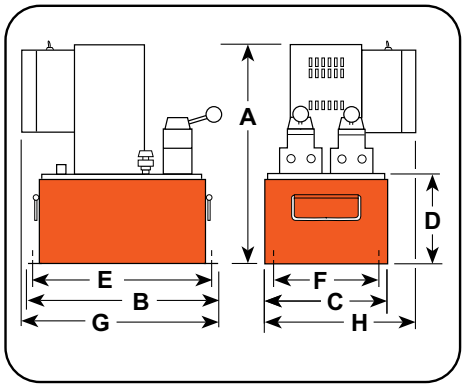

Technical Dimensions

Order No.	A	B	C	D	E	F	G	H	Max. Pressure Output	rpm	dBA at Idle and 10,000	115VAC** Amp Draw at 10,000	Oil Del. (cu. in./min. @)				Prod. Wt. with Oil
													100	1000	5,000	10,000	
	(in.)	(in.)	(in.)	(in.)	(in.)	(in.)	(in.)	(in.)	(psi)		(psi)	(psi)	(psi)	(psi)	(psi)	(psi)	(lbs.)
PED Series	20.75	18.00	11.50	8.50	16.50	9.00	18.00	13.00	10,000	3,450	87/85*	22	300	40	35	25	170.00

** Amp draw at 10,000 psi, 230VAC 50/60 Hz is 15 Amps.

Ordering Information

For Use With Cylinder Type	Description	Order No.	Valve Type	Valve No.	Valve Function	Control Switch	Motor	Reservoir Usable Oil Cap. (cu. in.)
Single-Acting	1.5 hp pump with 5 gallon reservoir. Valve has "Posi-Check" feature.	PED253	3-Way	9520	Advance Return	Remote Motor	1-1/2 hp, 115/230VAC 60 Hz, Single-Phase	1,000
Double-Acting	1.5 hp pump with 5 gallon reservoir. Valve has "Posi-Check" feature.	PED254	4-Way	9506	Advance Hold Return	Remote Motor	1-1/2 hp, 115/230VAC 60 Hz, Single-Phase	1,000
Double-Acting	1.5 hp pump with 5 gallon reservoir. Solenoid-operated remote valve.	PED254S	4-Way	9513	Advance Hold Return	Remote Control	1-1/2 hp, 115/230VAC 60 Hz, Single-Phase	1,000

NOTE: All remotes are 10 ft. long.

Model Shown:

PE302S, PE302



Features

IDEAL FOR MAINTENANCE AND CONSTRUCTION APPLICATIONS

- Deliver a powerful punch to operate single-acting or double-acting cylinders.
- Integral roll cage protects pump from abuse.
- 1 hp, single-phase, permanent magnet motor.
- High-performance-to-weight ratio.
- Starts under full load even when voltage is reduced to 50% of nominal rating.
- Quiet operation: 82 dBA @ 10,000 psi and 87 dBA @ 0 psi.
- Remote controls and/or solenoid valves feature 24VAC controls.
- CSA rated for intermittent duty.

PE30TWP



For Torque Wrench Pump Configurations, refer to the Tools Section.

Performance Specifications

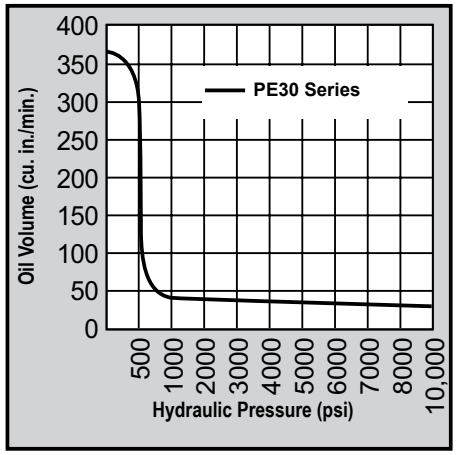

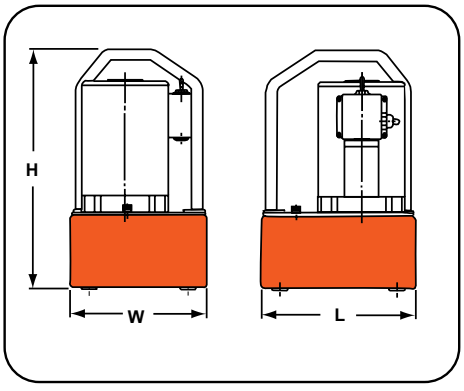

Technical Dimensions

Order No.	Overall Dimensions			Max. Pressure Output	dBA at Idle and 10,000	Amp Draw 115VAC at 10,000	Oil Del. (cu. in./min. @)					Prod. Wt. with Oil
	Length	Width	Height				100	500	1,000	5,000	10,000	
	(in.)	(in.)	(in.)	(psi)	(psi)	(psi)	(psi)	(psi)	(psi)	(psi)	(psi)	(lbs.)
PE30 Series with 1.25 gallon reservoir	20.75	18.00	11.50	10,000	87/82	13	300	200	44	38	30	56.00
PE30 Series with 1.75 gallon reservoir	10.00	9.00	16.00	10,000	87/82	13	300	200	44	38	30	64.00

Ordering Information

For Use With Cylinder Type	Description	Order No.	Valve Type	Valve No.	Valve Function	Control Switch	Motor (4,000 rpm)	Reservoir Usable Oil Cap. (cu. in.)
Single-Acting	Base model 1 hp pump with 1.25 gallon reservoir, & 2-position valve.	PE302	3-Way, 2-Position	9584	Advance Hold Return	On/Off Pulse Switch	1 hp 110/115VAC, 50/60 Hz, Single-Phase	280**
Single-Acting	1 hp pump with 1.75 gallon reservoir, & 2-position valve.	PE302-2	3-Way, 2-Position	9584	Advance Hold Return	On/Off Pulse Switch	1 hp 110/115VAC, 50/60 Hz, Single-Phase	380***
Single-Acting	1 hp pump with 1.25 gallon reservoir, 2 position valve, & remote motor control.	PE302R	3-Way, 2-Position	9584	Advance Hold Return	Remote Motor Control (10 ft.)	1 hp 110/115VAC, 50/60 Hz, Single-Phase	280**
Single-Acting	1 hp pump with 1.75 gallon reservoir, 2-position valve, & remote motor control.	PE302R-2	3-Way, 2-Position	9584	Advance Hold Return	Remote Motor Control (10 ft.)	1 hp 110/115VAC, 50/60 Hz, Single-Phase	380***
Single-Acting	1 hp pump with 1.25 gallon reservoir, solenoid-operated remote valve, & remote motor control.	PE302S†	3-Way, 2-Position	9579	Advance Hold Return	Remote Motor Control (10 ft.)	1 hp 110/115VAC, 50/60 Hz, Single-Phase	280**
Single-Acting	1 hp pump with 1.75 gallon reservoir, solenoid-operated remote valve, & remote motor control.	PE302S-2†	3-Way, 2-Position	9579	Advance Hold Return	Remote Motor & Valve (10 ft.)	1 hp 110/115VAC, 50/60 Hz, Single-Phase	380
Single-Acting	1 hp pump with 1.25 gallon reservoir, "Auto Dump" valve.	PE302A∞	Auto Dump	9610	Automatic Pilot Operation	Remote Motor Control (10 ft.)	1 hp 110/115VAC, 50/60 Hz, Single-Phase	280**
Single-Acting	Base model 1 hp pump with 1.25 gallon reservoir & 3-position valve.	PE303	3-Way, 3-Position	9520*	Advance Hold Return	On/Off Pulse Switch	1 hp 110/115VAC, 50/60 Hz, Single-Phase	280**
Single-Acting	1 hp pump with 1.75 gallon reservoir, & 3-position valve.	PE303-2	3-Way, 3-Position	9520*	Advance Hold Return	On/Off Pulse Switch	1 hp 110/115VAC, 50/60 Hz, Single-Phase	380***
Single-Acting	1 hp pump with 1.25 gallon reservoir, 3-position valve, & remote motor control.	PE303R	3-Way, 3-Position	9520*	Advance Hold Return	Remote Motor Control (10 ft.)	1 hp 110/115 VAC, 50/60 Hz, Single-Phase	280**
Single-Acting	1 hp pump with 1.75 gallon reservoir, 3- position valve, & remote motor control.	PE303R-2	3-Way, 3-Position	9520*	Advance Hold Return	Remote Motor Control (10 ft.)	1 hp 110/115VAC, 50/60 Hz, Single-Phase	380***
Double-Acting	Base model 1 hp pump with 1.25 gallon reservoir, & 4-way valve for double-acting systems	PE304	4-Way, 3-Position Tandem Center	9506*	Advance Hold Return	On/Off Pulse Switch	1 hp 110/115VAC, 50/60 Hz, Single-Phase	280**
Double-Acting	1 hp pump with 1.75 gallon reservoir, & 4-way valve for double-acting systems	PE304-2	4-Way, 3-Position Tandem Center	9506*	Advance Hold Return	On/Off Pulse Switch	1 hp 110/115VAC, 50/60 Hz, Single-Phase	380***
Double-Acting	1 hp pump with 1.25 gallon reservoir, 4-way valve for double-acting systems, & remote motor control.	PE304R	4-Way, 3-Position Tandem Center	9506*	Advance Hold Return	Remote Motor Control (10 ft.)	1 hp 110/115VAC, 50/60 Hz, Single-Phase	280**
Double-Acting	1 hp pump with 1.75 gallon reservoir, 4-way valve for double-acting systems, & remote motor control.	PE304R-2	4-Way, 3-Position Tandem Center	9506*	Advance Hold Return	Remote Motor Control (10 ft.)	1 hp 110/115VAC, 50/60 Hz, Single-Phase	380***

* Posi-Check® valve design, Posi-Check® guards against pressure loss when valve is shifted from "advance" to "hold" position.

** Shipped with 1 gal. of oil (231 cu. in., 210 usable).

*** Shipped with 2 gal. of oil.

∞ Not to be used for lifting applications. Best suited for crimping, pressing & punching applications.

† 115VAC, 60 Hz.

NOTE: For 220/230VAC, 50/60 Hz. add suffix "- 220" (example PE302-220).

Model Shown:

PE462A, PE462S, PE464



Features

BEST SUITED FOR UNDER-THE-ROOF MAINTENANCE AND PRODUCTION APPLICATIONS.

- Two-speed high-performance pump.
- For use with single or double-acting cylinders at operating pressures up to 10,000 psi.
- Equipped with a 1-½ hp, 3,450 rpm single-phase, 60 Hz thermal protected induction motor that starts under full load. Noise level of 77-81 dBA.
- All equipped with a 10 foot remote control except PE462S which has a 25 foot remote control.
- 24VAC control circuit on all units with remote control.
- CSA rated for intermittent duty.

PE46 series pump and RD5513 cylinder used in a special press that produces pharmaceutical-grade extracts for herbal medicines.



Performance Specifications

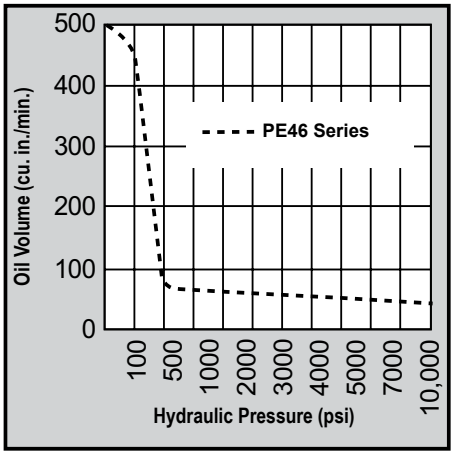

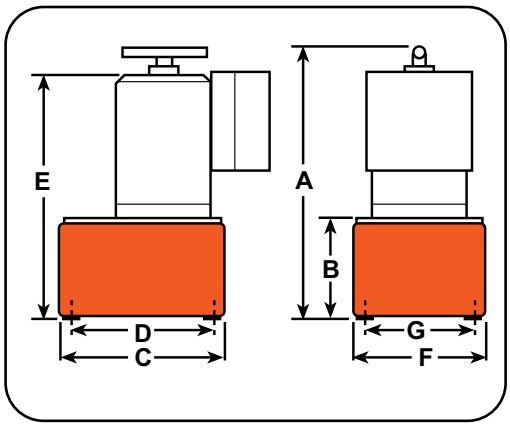

Hydraulic Hoses

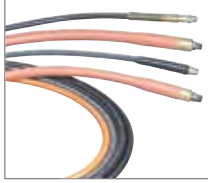

Heavy-duty and thermo plastic hydraulic hoses to meet your requirements and safety factor.

Refer to the accessories section for details.

Hydraulic Fluids



For dependable performance of all your hydraulic pumps and cylinders. Power Team specialty blended oils contains foam suppressant additives and has a high viscosity index. Refer to the Accessories section for complete details

Technical Dimensions

Order No.	A	B	C	D	E	F	G	Max. Pressure Output	rpm	dBA at Idle and 10,000	115VAC Amp Draw at 10,000	Oil Del. (cu. in./min. @) †				Prod. Wt. with Oil
												100	1000	5,000	10,000	
	(in.)	(in.)	(in.)	(in.)	(in.)	(in.)	(in.)	(psi)		(psi)	(psi)	(psi)	(psi)	(psi)	(psi)	(lbs.)
PE46 Series	19.63	6.81	11.50	10.00	18.50	9.50	8.00	10,000	3,450	77/81*	25**	500	450	51	46	79.00

* Measured at 3 ft. distance, all sides.

** Requires 20 amp circuit.

† Typical delivery. Actual flow will vary with field conditions.

Ordering Information

For Use With Cylinder Type	Description	Order No.	Valve Type	Valve No.	Valve Function	Control Switch †††	Motor	Reservoir ***Usable Oil Cap. (cu. in.)
Single-Acting	Base model 1-1/2 hp pump with 2.5 gallon metal reservoir.	PE462	3-Way	9584	Advance Return†	Remote Motor Control (10 ft.) on/off	1 1/2 hp, 115/230VAC* 60 Hz, Single-Phase	590
Single-Acting	1-1/2 hp pump with solenoid valve, & 2.5 gallon metal reservoir.	PE462S††	3-Way	9579	Advance Return**	Remote Motor/ Valve(25 ft.)	1 1/2 hp, 115/230VAC* 60 Hz, Single-Phase	590
Single-Acting	1-1/2 hp pump with "dump valve", & 2.5 gallon metal reservoir.	PE462A∞	Auto/ Dump 3-Way	9610	Advance Return	Remote Motor Control (10 ft.) on/off	1 1/2 hp, 115/230VAC* 60 Hz, Single-Phase	590
Double-Acting, Multi Single-Acting	1-1/2 hp pump with 9500 double-acting valve, & 2.5 gallon metal reservoir.	PE464	4-Way	9500	Advance Hold Return†	Remote Motor Control (10 ft.) on/off	1 1/2 hp, 115/230VAC* 60 Hz, Single-Phase	590
Double-Acting, Multi Single-Acting	1-1/2 hp pump with 9592 double-acting valve, & 2.5 gallon metal reservoir.	PE464S††	3/4-Way	9592	Advance Return**	Remote Motor/Valve (10 ft.)	1 1/2 hp, 115/230VAC* 60 Hz, Single-Phase	590

* Available with 220VAC 50 Hz motor (to order, place suffix "50-220" behind pump order number). Specify voltage when ordering.

** Advance position holds pressure with motor shut-off.

*** Usable oil is calculated with the oil fill at the recommended level of 1.50" below reservoir cover plate.

† Advance position holds pressure with motor shut-off. Return position returns cylinder.

†† 115VAC, 60 Hz.

††† The remote motor control switch on PE46 series pumps is 24VAC.

∞ Not to be used for lifting. When pump is shut-off, oil returns to reservoir.

Model Shown:

PE554S, PE552, PE554W



Features

INDUSTRY LEADING HEAVY-DUTY PUMP FOR MULTIPLE APPLICATIONS

- 1-1/8 hp, 12,000 rpm, 110/115VAC, 50/60 Hz universal motor. Draws 25 amps at full load, starts at reduced voltage.
- True unloading valve achieves greater pump efficiency, allowing higher flow at maximum pressure.
- Reservoirs available in sizes up to 10 gallons, refer to pump accessories page.
- Lightweight and portable. Best performance-to-weight ratio of all Power Team pumps.
- 10 foot remote motor control (except PE552S which has a 25 foot remote motor and valve control).
- "Assemble to Order" System allows you to choose from a wide range of pre-engineered, off-the-shelf components to build a customized pump to fit specific requirements. Refer to the "Assemble to Order" (ATO) Pump Pages.
- CSA rated for intermittent duty.

Torque Wrench Pumps



For Torque Wrench Pump Configurations, refer to the Tools Section.

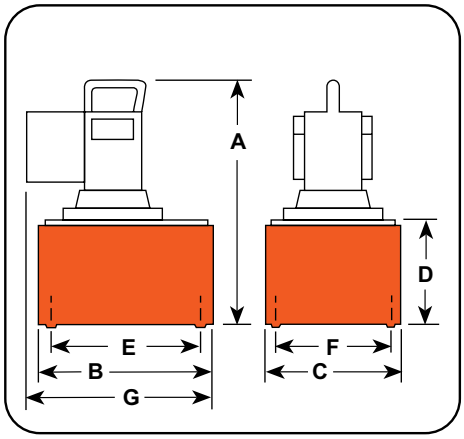

Performance Specifications

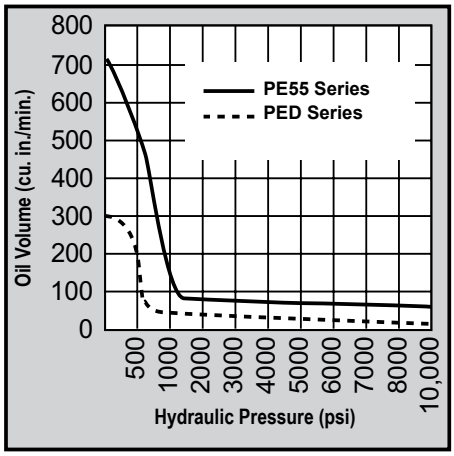

Technical Dimensions

Order No.	A	B	C	D	E	F	G	Max. Pressure Output	rpm	dBA at Idle and 10,000	115VAC* Amp Draw at 10,000	Oil Del. (cu. in./min. @)				Prod. Wt. with Oil
												0	700	5,000	10,000	
	(in.)	(in.)	(in.)	(in.)	(in.)	(in.)	(in.)	(psi)		(psi)	(psi)	(psi)	(psi)	(psi)	(psi)	(lbs.)
PE55 Series	18.25	11.50	9.50	7.00	10.00	8.00	14.00	10,000	12,000	90/89*	25	704	440	74	56	65.00

* Amp draw at 10,000 psi, 230VAC 50/60 Hz is 15 Amps.

Ordering Information

For Use With Cylinder Type	Description	Order No. ***	Valve Type	Valve No.	Valve Function	Control Switch ††	Motor	Reservoir Usable Oil Cap. (cu. in.)
Single-Acting	Base model 1-1/8 hp pump with 2.5 gallon reservoir, & remote motor control	PE550	-	-	-	Remote Motor	1 1/8 hp*, 110/115VAC 50/60 Hz, Single-Phase	525
Single-Acting	Base model 1-1/8 hp pump with 5 gallon reservoir, remote motor control.	PE550-RP50	-	-	-	Remote Motor	1 1/8 hp*, 110/115VAC 50/60 Hz, Single-Phase	1150
Single-Acting	Base model 1-1/8 hp pump with 2.5 gallon reservoir, remote motor control, & 3-way valve.	PE552	3-Way	9582	Advance Return **	Remote Motor	1 1/8 hp*, 110/115 VAC 50/60 Hz, Single-Phase	525
Single-Acting	1-1/8 hp pump with 2.5 gallon reservoir, remote motor control, & solenoid-operated remote valve.	PE552S	3-Way	9579	Advance Hold Return	Remote Motor & Valve	1 1/8 hp*, 110/115VAC 50/60 Hz, Single-Phase	525
Single-Acting	1-1/8 hp pump with 5 gallon reservoir, remote motor control, & solenoid-operated remote valve.	PE552S-RP50	3-Way	9579	Advance Hold Return	Remote Motor & Valve	1 1/8 hp*, 110/115VAC 50/60 Hz, Single-Phase	1150
Single-Acting	1-1/8 hp pump with 2.5 gallon reservoir, remote motor control, & "Auto Dump" valve.	PE552A∞	Auto/ Dump	9610	Advance Return	Remote Motor	1 1/8 hp*, 110/115VAC 50/60 Hz, Single-Phase	525
Single-Acting	1-1/8 hp pump with 2.5 gallon reservoir, remote motor control, & "Auto Dump" valve.	PE552F∞	Auto/ Dump	9610A	Advance Return	Remote Motor	1 1/8 hp*, 110/115VAC 50/60 Hz, Single-Phase	525
Single-Acting	1-1/8 hp pump with 2.5 gallon reservoir. Valve has "Posi-Check" feature	PE553	3-Way†	9520	Advance Hold Return	Remote Motor	1 1/8 hp*, 110/115VAC 50/60 Hz, Single-Phase	525
Single-Acting	1-1/8 hp pump with 5 gallon reservoir. Valve has "Posi-Check" feature	PE553-RP50	3-Way†	9520	Advance Hold Return	Remote Motor	1 1/8 hp*, 110/115VAC 50/60 Hz, Single-Phase	1150
Double-Acting	Base model 1-1/8 hp pump with 2.5 gallon reservoir, and 4-way valve for double-acting systems	PE554	4-Way†	9506	Advance Hold Return	Remote Motor	1 1/8 hp*, 110/115VAC 50/60 Hz, Single-Phase	525
Double-Acting	Base model 1-1/8 hp pump with 5 gallon reservoir, and 4-way valve for double-acting systems	PE554-RP50	4-Way†	9506	Advance Hold Return	Remote Motor	1 1/8 hp*, 110/115VAC 50/60 Hz, Single-Phase	1150
Double-Acting	Pump equipped with 3/4-way solenoid valve, and 5 gallon reservoir	PE554S-RP50	3/4-Way	9592	Advance Hold Return	Remote Motor & Valve	1 1/8 hp*, 110/115VAC 50/60 Hz, Single-Phase	1150
Double-Acting	Weather-resistant model 1-1/8 hp pump with 2.5 gallon reservoir, and 4-way valve for double-acting systems.	PE554W	4-Way†	9506	Advance Hold Return	Remote Motor	1 1/8 hp*, 110/115VAC 50/60 Hz, Single-Phase	525
Double-Acting	Weather-resistant model 1-1/8 hp pump with 5 gallon reservoir, and 4-way valve for double-acting systems.	PE554W-RP50	4-Way†	9506	Advance Hold Return	Remote Motor	1 1/8 hp*, 110/115VAC 50/60 Hz, Single-Phase	525
Double-Acting	1-1/8 hp pump with 2.5 gallon reservoir, and 9500 tandem center valve for double-acting systems.	PE554T	4-Way	9500	Advance Hold Return	Remote Motor	1 1/8 hp*, 110/115VAC 50/60 Hz, Single-Phase	525
Double-Acting	For use with single-acting Spring Seat, Stressing Jack or double-acting cylinder. Includes hour meter.	PE554P	4-Way	9500	Advance Hold Return	Remote Motor	1 1/8 hp*, 110/115VAC 50/60 Hz, Single-Phase	525
Double-Acting	"For use with single-acting or double-acting Power Seat, Stressing Jacks ONLY."	PE554PT	4-Way	9628	Advance Hold Return	Remote Motor	1 1/8 hp*, 110/115VAC 50/60 Hz, Single-Phase	525
Double-Acting	Pump suitable to run multiple spring return tools.	PE554C	4-Way	"9511 †††"	Advance Hold Return	Remote Motor	1 1/8 hp*, 110/115VAC 50/60 Hz, Single-Phase	525
Double-Acting	Pump equipped with 3/4-way solenoid valve.	PE554S	3/4-Way	9592	Advance Hold Return **	Remote Motor & Valve	1 1/8 hp*, 110/115VAC 50/60 Hz, Single-Phase	525

* Pumps available with 230VAC, 60/50 Hz motors. Specify voltage when ordering. See "Assemble to Order" pump options

** Holds with motor shut-off.

† Valves have Posi-Check® feature.

†† All remotes are 10 ft. long except for PE552S which is 25 ft. long.

††† Valving allows alternate and independent operation of two different spring return tools. Valve holds pressure only while valve is in "A" or "B" port position with pump motor shut-off.

∞ Not to be used for lifting.

PE60 SERIES

TWO-SPEED, SINGLE AND DOUBLE-ACTING, ELECTRIC PUMP, POST-TENSIONING, 56 CU. IN. / MIN.

Power Team

Model Shown:

PE604T, PE604PT



Features

COMPACT, LIGHTWEIGHT PUMP. EXCELLENT CHOICE FOR RUGGED APPLICATIONS AND LOW VOLTAGE STARTING.

- Pump offers long, trouble-free life in the most demanding work environments.
- For operating single or double-acting cylinders, or stressing jacks.
- Powered by 1-1⁄8 hp, 115VAC, 50/60 Hz single-phase motor. Starts under load, even at reduced voltages at construction sites.
- Optional fan-driven external oil cooler includes rollover guard.
- Insulated carrying handle.
- Integral 4” dia. fluid-filled pressure gauge with steel bezel complies with ASME B40.1 Grade A.
- Sealed 0.754 gallon (usable) reservoir. Reservoir drain port is standard.
- Oil level sight gauge for accurate oil level monitoring.
- External spin-on filter removes contaminants from circulating oil to maximize pump, valve and cylinder/ tool life.
- CSA rated for intermittent duty.

The PE60 used for pre-stressing application





Performance Specifications

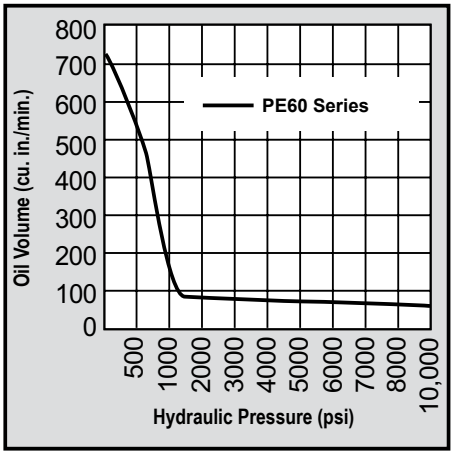

Optional: Oil Cooler Kit

For Use With:	Kit Order No.	Voltage	Wt. (lbs.)
PE604T or PE604PT	252511	115VAC	5.00
	252512	220VAC	5.00

Hydraulic Fluids



For dependable performance of all your hydraulic pumps and cylinders. Power Team specialty blended oils contains foam suppressant additives and has a high viscosity index. Refer to the Accessories section for complete details

Learn More - About Hydraulic Safety Insight

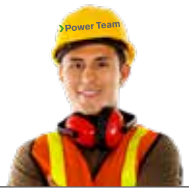

Looking for great safety suggestions? Visit our Resource Section to get a better understanding of hydraulic and mechanical safety insights on what to look for when working around hydraulics

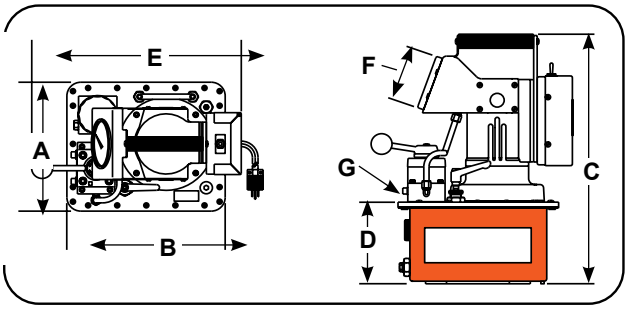

Technical Dimensions

Order No.	A	B	C	D	E	F	G	Max. Pressure Output	rpm	dBA at Idle and 10,000	115VAC Amp Draw at 10,000	Oil Del. (cu. in./min. @)				Prod. Wt. with Oil
												0	700	5,000	10,000	
	(in.)	(in.)	(in.)	(in.)	(in.)	(in.)	(in.)	(psi)		(psi)	(psi)	(psi)	(psi)	(psi)	(psi)	(lbs.)
PE604T	9.31	11.50	18.25	6.00	15.00	4.00	3/8 NPTF	10,000	10,000	80/85	25	704	440	74	56	50.00
PE604PT	9.31	11.50	18.25	6.00	15.00	4.00	3/8 NPTF	10,000	12,000	80/85	25	704	440	74	56	51.00

NOTE: Unloading pressure is 1,000 psi.

Ordering Information

For Use With Cylinder Type	Description	Order No.	Valve Type	Valve No.	Valve Function	Control Switch	Motor	Reservoir Usable Oil Cap. (cu. in.)
Single-Acting, Spring Seat, Stressing Jack or Double-Acting	1-1/8 hp pump with 0.75 gallon reservoir & valve for double-acting systems.	PE604T	4-Way/ 3-Position	9500	Advance Hold Return	On/Off Pulse	1-1/8 hp, 115VAC 60/50 Hz, Single-Phase	157
Single-Acting or Double-Acting Power Seat, Stressing Jacks Only	1-1/8 hp pump with 0.75 gallon reservoir & a special valve for post- tensioning application only.	PE604PT	4-Way/ 3-Position	9628 Model C	Advance Hold Sequenced Return	On/Off Pulse	1-1/8 hp, 115VAC 60/50 Hz, Single-Phase	157

NOTE: Contact Factory for PE60 pump models with other control and valve options.

NOTE: For 220/230VAC, 50/60 Hz, single-phase models, add -220 suffix.

Model Shown:

PQ603, PQ604, PQ604S



Features

PUMP DESIGNED SPECIFICALLY FOR HEAVY-DUTY, EXTENDED CYCLE OPERATION.

- For operating single or double-acting cylinders.
- Metal shroud keeps dirt and moisture out of motor and electrical components.
- Electrical shut-down feature prevents unintentional restarting of motor following an electrical service interruption.
- Internal relief valve limits pressure to 10,000 psi.
- External relief valve is adjustable from 1,000 to 10,000 psi.
- Pumps operate below maximum OSHA noise limitation (74-76 dBA).
- Start and operate under full load, even with voltage reduced by 10%.
- CSA rated for intermittent duty.

Hydraulic Fluids



For dependable performance of all your hydraulic pumps and cylinders. Power Team specialty blended oils contains foam suppressant additives and has a high viscosity index. Refer to the Accessories section for complete details

Hydraulic Machine Press Operation.

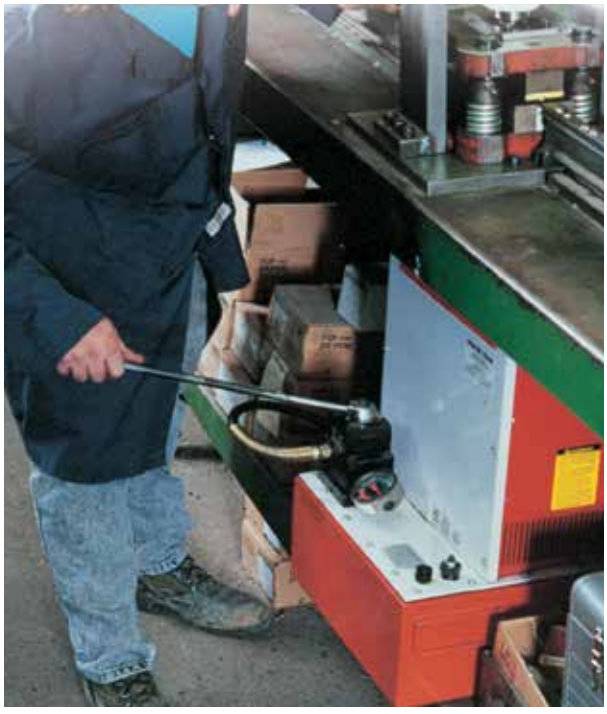

Performance Specifications

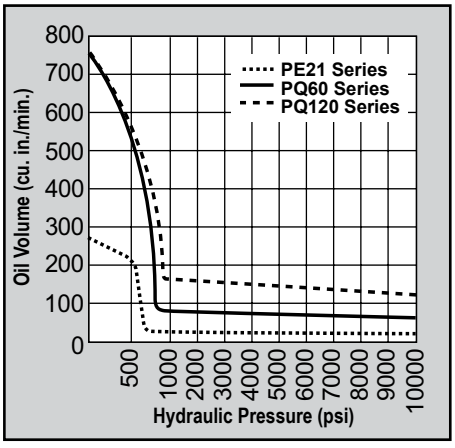

Universal Pump Cart



Mobilize your hydraulic pumps with the cart # PC200 - refer to the accessories section for details. Cart can be used with the following pumps; PA60, PA64, PA55/PE55, PE18, PE21, PQ60, PQ120, PG55 series and pumps with optional 5- and 10-gallon reservoirs; Nos. RP50, RP51, RP101 and RP103. (Pump not included)

Optional: Swivel Casters



Order No.	Description	Wt. (lbs.)
10494	2" dia. swivel casters (4 Required)	0.30

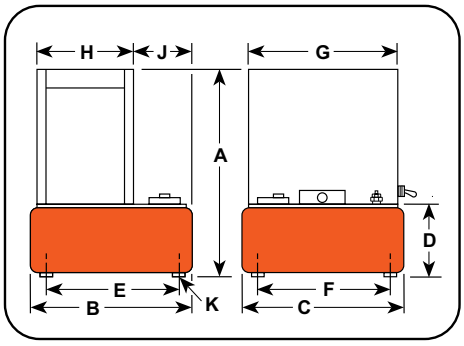

Technical Dimensions

Order No.	A	B	C	D	E	F	G	H	J	K	Max. Pressure Output	rpm	dBA at Idle and 10,000	Oil Del. (cu. in./min. @)				Prod. Wt. with Oil
														100	1000	5,000	10,000	
	(in.)	(in.)	(in.)	(in.)	(in.)	(in.)	(in.)	(in.)	(in.)	(in.)	(psi)		(psi)	(psi)	(psi)	(psi)	(psi)	(lbs.)
PQ60 Series	25.13	14.25	15.50	7.25	12.13	13.31	14.69	9.31	4.81	1/2-20 UNF	10,000	1,725	74/76 *	730	70	65	60	169.00**

* Measured at 3 ft. distance, all sides.

** Total weight with oil and 3-way solenoid valve. Subtract 10 lbs. to obtain weight of pump with manual valve.

Ordering Information

For Use With Cylinder Type	Description	Order No.	Valve Type	Valve No.	Valve Function	Max. Amp Draw @ 10,000 (psi)	Motor ††	Reservoir Usable Oil Cap. (cu. in.)
Single-Acting	2 hp pump with 5.7 gallon reservoir and manual valve.	PQ603	3-Way	9520*	Advance Hold Return	115VAC -22 amps 230VAC -11 amps	2 hp, 230VAC 60 Hz, Single-Phase	1,250
Single-Acting	2 hp pump with 5.7 gallon reservoir and solenoid-operated remote valve.	PQ603S	3-Way	9599†	Advance Hold Return	115VAC -22 amps 230VAC -11 amps	2 hp, 230VAC 60 Hz, Single-Phase	1,250
Double-Acting	2 hp pump with 5.7 gallon reservoir and manual valve.	PQ604	4-Way	9506*	Advance Hold Return	115VAC -22 amps 230VAC -11 amps	2 hp, 230VAC 60 Hz, Single-Phase	1,250
Double-Acting	2 hp pump with 5.7 gallon reservoir and solenoid-operated remote valve.	PQ604S	4-Way	9512†	Advance Hold Return	115VAC -22 amps 230VAC -11 amps	2 hp, 230VAC 60 Hz, Single-Phase	1,250

* Manual valve. Pump is equipped with RUN/OFF/PULSE switch for control of motor.

† Solenoid valve. Pump is equipped with a remote control switch with 10 ft. cord.

†† PQ60 series also available in 115VAC, 60 Hz or 220VAC, 50 Hz. Please specify when ordering. Example: for 60 Hz order PQ603-115; for 50 Hz order PQ603-50-220.

NOTE: Some Power Team pumps are available in special configurations not listed in this catalog. For your special requirements please consult your local distributor or the Power Team factory.

Model Shown:

PQ1203, PQ1204, PQ1204S



Features

PUMP DESIGNED SPECIFICALLY FOR HEAVY-DUTY, EXTENDED CYCLE OPERATION.

- Start and operate under full load, even with voltage reduced by 10%.
- Electrical shut-down feature prevents unintentional restarting of motor following an electrical service interruption.
- Internal relief valve limits pressure to 10,000 psi.
- External relief valve is adjustable from 1,000 to 10,000 psi.
- Pump pre-wired at factory with a 3 hp, 460VAC, 60 Hz, three-phase motor. Other electrical configurations are available. See ordering information on the following page.
- 24VAC control circuit on units with remote control for added user/operator safety.
- Thermal overload protection, motor starter and heater element supplied as **standard equipment.**
- Metal shroud keeps dirt and moisture out of motor and electrical components.
- Pumps operate below OSHA noise limitation (74-76 dBA).
- CSA rated for intermittent duty.

PQ series pump used to drive piers to lift and stabilize building foundation.



Performance Specifications

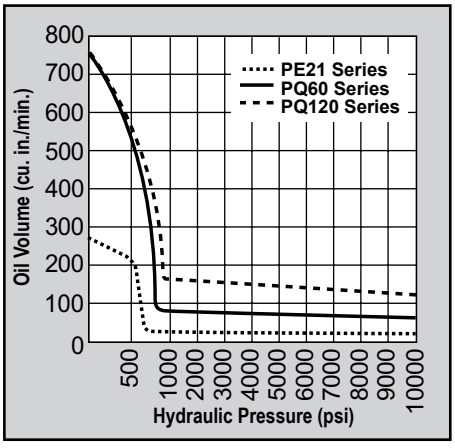

Optional: Swivel Casters (4)



Order No.	Description	Wt. (lbs.)
10494	2" dia. swivel casters	0.30

Analog Gauges



Improve your system visibility and safety by adding an in-line hydraulic gauge to your circuit.

9440 (2.5 in.), **9052** (4 in.), and **9089** (6 in.)

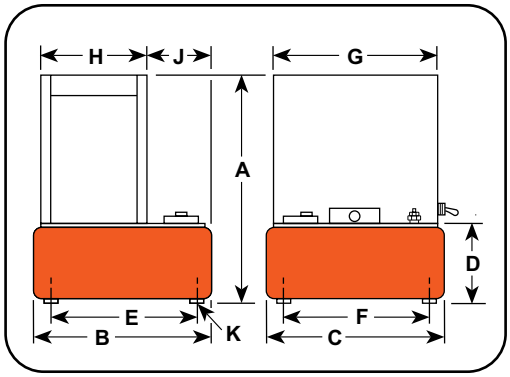

Technical Dimensions

Order No.	A	B	C	D	E	F	G	H	J	K	Max. Pressure Output	rpm	dBA at Idle and 10,000	Oil Del. (cu. in./min. @)				Prod. Wt. ** with Oil
														0	1000	5,000	10,000	
	(in.)	(in.)	(in.)	(in.)	(in.)	(in.)	(in.)	(in.)	(in.)	(in.)	(psi)		(psi)	(psi)	(psi)	(psi)	(psi)	(lbs.)
PQ120 Series	25.13	14.25	15.50	7.25	12.13	13.31	14.69	9.31	4.81	1/2-20 UNF	10,000	1,725	73/78	730	160	130	120	164.00

** Total weight with oil and 3-way solenoid valve. Subtract 10 lbs. to obtain weight of pump with manual valve.

Ordering Information

For Use With Cylinder Type	Description	Order No.	Valve Type	Valve No.	Valve Function	Max. Amp Draw @ 10,000 (psi)	Motor ††	Reservoir Usable Oil Cap. (cu. in.)
Single-Acting	3 hp pump with 5.7 gallon reservoir and manual valve.	PQ1203	3-Way	9520*	Advance Hold Return	230VAC -10.5 amps 460VAC -5.3 amps	3 hp, 460VAC 60 Hz, Three-Phase	1,250
Single-Acting	3 hp pump with 5.7 gallon reservoir and solenoid-operated remote valve.	PQ1203S	3-Way	9599†	Advance Hold Return	230VAC -10.5 amps 460VAC -5.3 amps	3 hp, 460VAC 60 Hz, Three-Phase	1,250
Double-Acting	3 hp pump with 5.7 gallon reservoir and manual valve.	PQ1204	4-Way	9506*	Advance Hold Return	230VAC -10.5 amps 460VAC -5.3 amps	3 hp, 460VAC 60 Hz, Three-Phase	1,250
Double-Acting	3 hp pump with 5.7 gallon reservoir and solenoid-operated remote valve.	PQ1204S	4-Way	9512†	Advance Hold Return	230VAC -10.5 amps 460VAC -5.3 amps	3 hp, 460VAC 60 Hz, Three-Phase	1,250

* Manual valve. Pump is equipped with RUN/OFF/PULSE switch for control of motor.

† Solenoid valve. Pump is equipped with a remote control switch with 10 ft. cord.

†† PQ120 series also available in 230VAC 60 Hz or 220/380VAC 50 Hz. Please specify when ordering. Example: for 60 Hz order PQ1204S-230; for 50 Hz. order PQ1204S-50-220 or PQ1204S-50-380.

NOTE: PQ120 Series also available in 575VAC 60 Hz. Consult the factory.

Model Shown:

PE4004S



PE4004S pump and RD3006 cylinder used in a special press which repairs damaged chain links for the shipping industry.







Features

PUMP DESIGNED SPECIFICALLY FOR HEAVY-DUTY, EXTENDED CYCLE OPERATION.

- Two-speed high output pump delivers up to 5 gpm of oil.
- Low noise level of 73-80 dBA.
- Integral electrical shut-down feature prevents unintentional restarting of motor following an electrical service interruption. Over-current protection prevents damage to motor as a result of overheating.
- “Stop” and “Start” control buttons are 24VDC.
- PE4004 has a 4-way/3-position manual valve.
- PE4004S has a 4-way/3-position solenoid valve with a 24VDC remote hand switch.
- External pressure relief valve is adjustable from 1,500 to 10,000 psi.
- Heavy-duty 4” diameter casters assure easy maneuvering.
- 20 gallon (3,927 cu. in. usable) reservoir has a low oil level sight gauge.
- Powered by a dual voltage 10 hp, three-phase, 1,725 rpm motor.
- Three-phase motor has all the electrical components necessary to operate the pump. **The customer has no hidden charges when making a purchase.**
- Deliver 1,200 cu. in./min. of oil @ 200 psi, 420 cu. in./min. of oil @ 10,000 psi.
- CSA rated for intermittent duty.

Performance Specifications

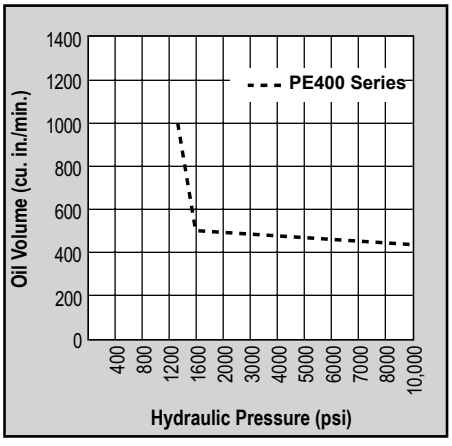

Analog Gauges



Improve your system visibility and safety by adding an in-line hydraulic gauge to your circuit.

9440 (2.5 in.), **9052** (4 in.), and **9089** (6 in.)

Load Lowering Valve



Precision metering for controlled cylinder piston return. Operation: Permits free flow when extending cylinder, built-in pressure relief and Posi-Check® locks and holds load in raised position until operator opens valve.

Ordering number: **9596**

Learn More - About Hydraulic Safety Insight

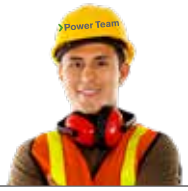

Looking for great safety suggestions? Visit our Resource Section to get a better understanding of hydraulic and mechanical safety insights on what to look for when working around hydraulics

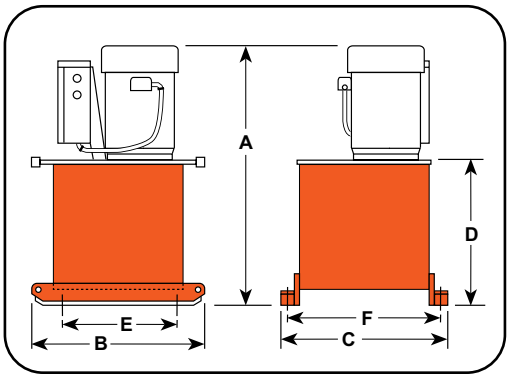

Technical Dimensions

Order No.	A	B	C	D	E	F	Max. Pressure Output	rpm	dBA at Idle and 10,000	Max. Amp Draw @ 10,000	Oil Del. (cu. in./min. @)				Prod. Wt. * with Oil
											200	1,200	5,000	10,000	
	(in.)	(in.)	(in.)	(in.)	(in.)	(in.)	(psi)		(psi)	(psi)	(psi)	(psi)	(psi)	(psi)	(lbs.)
PE4004	36.38	25.00	24.00	21.25	15.50	21.50	10,000	1,725	73/80	42 @230VAC	1,200	1,050	450	420	492.00
PE4004S	36.38	25.00	24.00	21.25	15.50	21.50	10,000	1.725	73/80	21 @460VAC	1,200	1,050	450	420	506.00

* Add 5" and 8 lbs. when casters are mounted. (Units are supplied with four 4" dia. swivel casters.)

Ordering Information

For Use With Cylinder Type	Description	Order No.	Valve Type	Valve No.	Valve Function	Max. Amp Draw @ 10,000 (psi)	Motor	Reservoir Usable Oil Cap. † (cu. in.)
Double-Acting	10 hp pump with 20 gallon reservoir and manual valve.	PE4004	4-Way	9506	Advance Hold Return	230VAC -42 amps 460VAC -21 amps	10 hp, 208/230/460VAC* 60 Hz, 3-Phase	3,927†
Double-Acting	10 hp pump with 20 gallon reservoir and solenoid-operated remote valve.	PE4004S	4-Way	9512**	Advance Hold Return	230VAC -42 amps 460VAC -21 amps	10 hp, 208/230/460VAC* 60 Hz, 3-Phase	3,927†

* Factory wired for this voltage. For 230VAC, 60Hz order PE4004S-230.

** Solenoid valve with remote control.

† Usable oil is calculated with oil fill at recommended level at 2.25" below cover plate.

NOTE: Valves for spring return cylinders are available upon request. Consult the factory.

Model Shown:
PE-NUT



Features

EXTREMELY DURABLE YET LIGHTWEIGHT AND OPERATE UNDER LOW-LINE VOLTAGE CONDITIONS.

- 5/8 hp universal electric motor (50/60 Hz cycle), intermittent duty pump.
- Two-stage pump for rapid ram advance.
- Operational under low-line voltage conditions.
- Designed for use with spring-returned remote tools.
- High-pressure safety relief valve.
- Remote hand control with 10-foot cord.
- Carrying handle.
- Factory filled oil reservoir.
- Pressure matched quick-coupler supplied.
- Piston-type high-pressure pump supercharged by a low-pressure pump.
- Optional operating pressures available (consult Power Team factory for details).
- Optional carrying case.

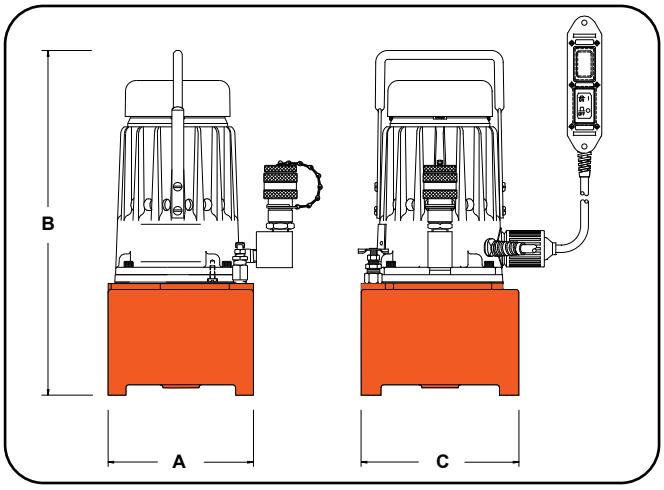

CAUTION

DESIGNED FOR CRIMPING APPLICATIONS ONLY!

This system should not be used for lifting.

Electrical Data

Electric Motor	Electric Control
5/8 hp, 10,000 rpm 115VAC, 50/60 Hz 11 amp current draw (115VAC @ 10,000 PSI)	Remote control with 10-foot cord

Ordering Information

Order No.	Overall Dimensions			Oil Delivery		Reservoir		Prod. Wt. With Oil
	A	B	C	100 (psi)	10,000 (psi)	Oil Cap.	Usable Oil Cap.	
	Width (in.)	Length (in.)	Depth (in.)	(cu. in./min.)	(cu. in./min.)	(cu. in.)	(cu. in.)	(lbs.)
PE-NUT	6.50	14.38	8.25	160	60	93	43	28.00
PE-NUTC*	6.50	14.38	8.25	160	60	93	43	28.00

* Includes Case

Model Shown:
PG1203/4S-CP



Features

TWO-STAGE PUMP FOR CRIMPING APPLICATIONS

PG1203-CP

- 6 hp Briggs & Stratton engine.
- Manual control valve.
- High-pressure safety relief valve.
- Protective roll cage.
- For use with single acting tools.

PG1203/4S-CP

- 5.5 hp Honda OHV-type engine.
- Solenoid valve with remote hand control with 10’ cord.
- Two-stage pump for rapid advance.
- High-pressure safety relief valve.
- Protective roll cage.
- For use with either single or double-acting tools.

Hydraulic Hoses

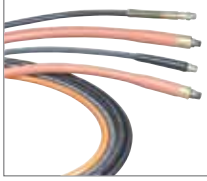

Heavy-duty and thermo plastic hydraulic hoses to meet your requirements and safety factor.

Refer to the accessories section for details.

CAUTION

DESIGNED FOR CRIMPING APPLICATIONS ONLY!

This system should not be used for lifting.

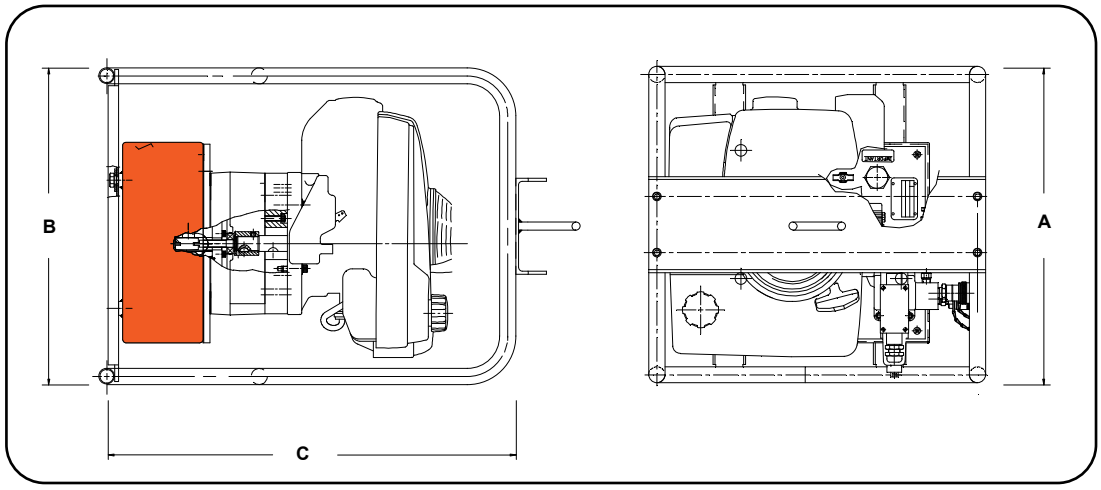

Ordering Information

Order No.	Overall Dimensions			Oil Delivery		Reservoir		Prod. Wt. With Oil
	A Width (in.)	B Length (in.)	C Depth (in.)	100 (psi) (cu. in./min.)	10,000 (psi) (cu. in./min.)	Oil Cap. (gal.)	Usable Oil Cap. (cu. in.)	(lbs.)
PG1203-CP	19.75	21.75	24.50	480	130	3	700	154.00
PG1203/4S-CP	19.75	21.75	24.50	480	130	3	700	154.00

Model Shown:

PG304, PG554





Features

GASOLINE POWER IDEAL FOR REMOTE LOCATIONS.

- A logical choice at work sites where electricity or compressed air are unavailable. For single or double-acting cylinders at operating pressures up to 10,000 psi.
- All gasoline engine/hydraulic pumps feature Posi-Check® valve to guard against pressure loss when valve is shifted from “advance” to “hold.”

PG303 and PG304 (Up to 75 Ton)

- Powered by a 4-cycle, 2 hp Honda engine giving it the lowest weight to horsepower ratio of all gasoline driven pumps.
- Has an aluminum reservoir with 375 cu. in. of usable oil.
- PG30 series pumps are equipped with roll cages to protect pump from damage.
- PG303 is for single-acting cylinders, has a 9520 valve with separate internal return line which allows oil from running pump to return to reservoir, independently of cylinder return oil, when valve is in “return” position.
- PG304 is for double-acting cylinders, has a 9506 4-way (tandem center) valve.

PG553 and PG554 (Up to 150 Ton)

- 6 hp Intek “Diamond Edge” 4-cycle, by Briggs & Stratton.
- 5 gallon reservoir.
- PG553 has a 9520 3-way valve for single-acting cylinders.
- PG554 has a 9506 4-way valve for double-acting cylinders.
- Optional roll cage available.

Gasoline Powered Hydraulic Pumps like this PG303 help provide hydraulic force at remote locations.



Performance Specifications

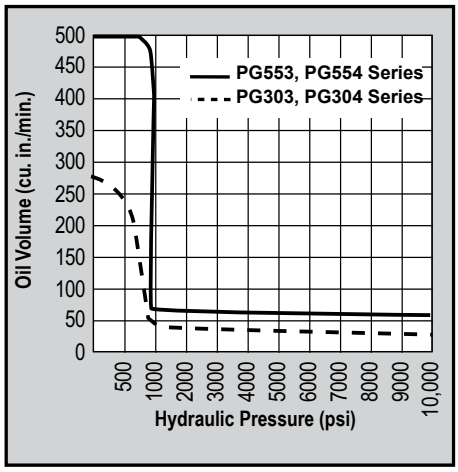

Hydraulic Hoses

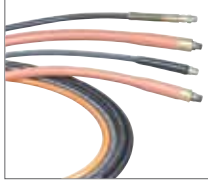

Heavy-duty and thermo plastic hydraulic hoses to meet your requirements and safety factor.

Refer to the accessories section for details.

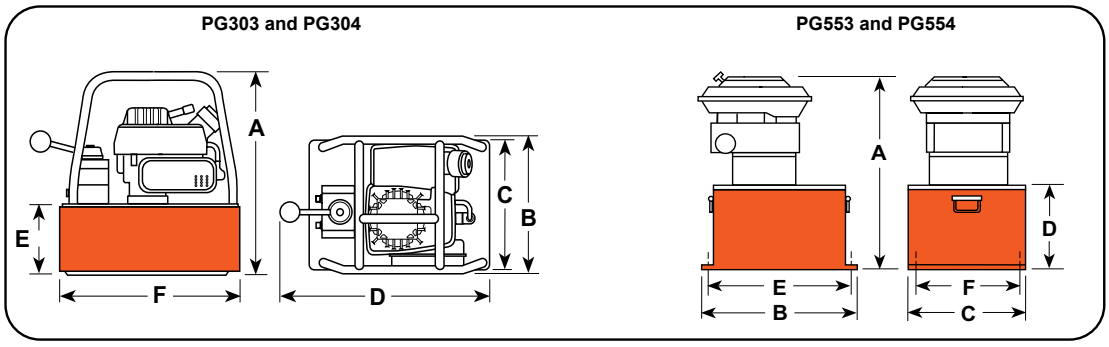

Technical Dimensions

Order No.	A	B	C	D	E	F	Max. Pressure Output	rpm	Oil Del. (cu. in./min. @)				Prod. Wt. with Oil
									100	1000	5,000	10,000	
	(in.)	(in.)	(in.)	(in.)	(in.)	(in.)	(psi)		(psi)	(psi)	(psi)	(psi)	(lbs.)
PG303, PG304	14.88	10.38	9.50	16.00	5.13	13.50	10,000	6,000	275*	40	35	30	32.00
PG553, PG554	22.00	18.00	12.50	8.63	16.63	20.25	10,000	3,600	480	75	70	55	120.00

* First stage oil delivery from 0-400 psi @ 230 cu. in. per minute minimum.

Ordering Information

For Use With Cylinder Type	Description	Order No.	Valve Type	Valve No.	Valve Function	Reservoir Usable Oil Cap. (cu. in.)	Horsepower	Cycle
Single-Acting	2 hp pump with 2 gallon reservoir and single-acting valve.	PG303	3-Way	9520	Advance Hold Return	375	2	2
Single-Acting	6 hp pump with 5.7 gallon reservoir and single-acting valve.	PG553	3-Way	9520	Advance Hold Return	1,300*	6	4
Double-Acting	2 hp pump with 2 gallon reservoir and double-acting valve.	PG304	4-Way	9506	Advance Hold Return	375	2	2
Double-Acting	6 hp pump with 5.7 gallon reservoir and double-acting valve.	PG554	4-Way	9506	Advance Hold Return	1,300*	6	4

* Usable oil is calculated with oil fill at recommended level at 1/2" below cover plate.

Model Shown:

PG4204S, PG1204S, PG1200M-4D



Features

TWO-SPEED HIGH-PERFORMANCE PUMPS IDEAL FOR CONSTRUCTION, STRUCTURE MOVING AND RIGGING APPLICATIONS.

- A logical choice at work sites where electricity or compressed air are unavailable. For single or double-acting cylinders at operating pressures to 10,000 psi.
- All gasoline engine/hydraulic pumps feature Posi-Check® valve to guard against pressure loss when valve is shifted from “advance” to “hold.”
- PG1200 Series pumps powered by a Honda 4-cycle, 5.5 hp engine with automatic decompression and electronic ignition. Deliver over 0.5 gallon (130 cu. in.) of oil per minute at 10,000 psi.
- A 5 gallon reservoir means adequate capacity for multi-cylinder applications. Dual element air cleaner protects engine from dusty environments.
- Heavy-duty “roll cage” provides pick-up points for lifting. Horizontal bars on PG1203, PG1204 and PG1204S protect unit, provide hand holds for carrying.
- Rubber anti-skid insulation on bottom of reservoir resists skidding and dampens vibration. PG1200M-4 and PG1200M-4D include a pump cart with 12” wheels.
- Adjustable external pressure regulator.
- CSA rated for intermittent duty.

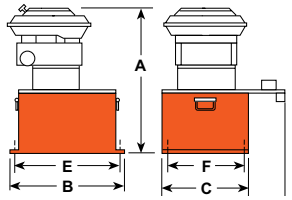

PG120HM

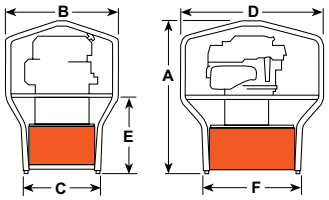

PG1203, PG1204, PG1204S

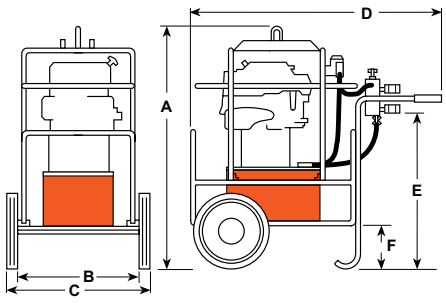

PG1200M-4 and PG1200M-4D

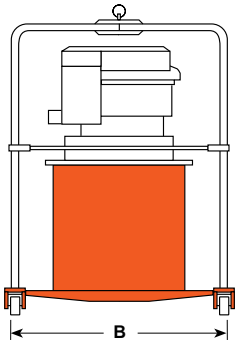

PG4204 and PG4204S

Technical Dimensions

Order No.	A	B	C	D	E	F	Max. Pressure Output	rpm	Oil Del. (cu. in./min. @)				Prod. Wt. with Oil
									100	1,000	5,000	10,000	
	(in.)	(in.)	(in.)	(in.)	(in.)	(in.)	(psi)		(psi)	(psi)	(psi)	(psi)	(lbs.)
PG120HM	23.00	15.50	14.25	19.00	13.31	12.13	10,000	3,600	480	175	150	130	150.00
PG1203	27.88	20.25	14.25	26.25	13.50	18.25	10,000	3,600	480	175	150	130	154.00
PG1204	27.88	20.25	14.25	26.25	13.50	18.25	10,000	3,600	480	175	150	130	154.00
PG1204S	27.88	20.25	14.25	26.25	13.50	18.25	10,000	3,600	480	175	150	130	161.00
PG1200M-4	42.13	18.00	25.00	42.50	26.25	7.25	10,000	3,600	480	175	150	130	260.00
PG1200M-4D	42.13	18.00	25.00	42.50	26.25	7.25	10,000	3,600	480	175	150	130	280.00
PG4204	50.25	52.00	52.00	—	—	—	10,000	3,600	1,240	1,120	475	400	435.00
PG4204S	50.25	52.00	52.00	—	—	—	10,000	3,600	1,240	1,120	475	400	440.00

PG1200M-4

- For single-acting cylinders. Has 9520 3-way/3-position (tandem center) valve, 9596 load-lowering valve and 9644 4-port manifold with individual needle valves at each port.
- Has a 9796 coupler and 9797 dust cap at each port. Valving permits precise individual control of up to four cylinders.
- A 9052 heavy-duty, fluid filled pressure gauge (0-10,000 psi) is included.

PG1200M-4D

- For single or double-acting cylinders with precise individual control of up to four cylinders possible.
- Equipped same as PG1200M-4, except has 9506 4-way/3-position (tandem center) valve, and second 4-port manifold without needle valves mounted beneath 9644 manifold for operating double-acting cylinders.

PG420 Series Maximum Output Hydraulic Power Package

- Ideal for single or multiple cylinder applications. Has a 4-cycle, 20 hp Honda engine and 20 gallon hydraulic reservoir (17 gallons usable) with low oil level sight gauge.
- Steel roll cage protects pump, has a lifting hook, and 4" dia. swivel casters provide mobility.
- Delivers 400 cu. in. of oil at maximum operating pressure.
- Has a 9506 4-way valve. On/off switch and speed control are protected by a panel. Sturdy molded case protects battery (not included).
- USA EPA Clean Air Act EVAP Certified Product.

Performance Specifications

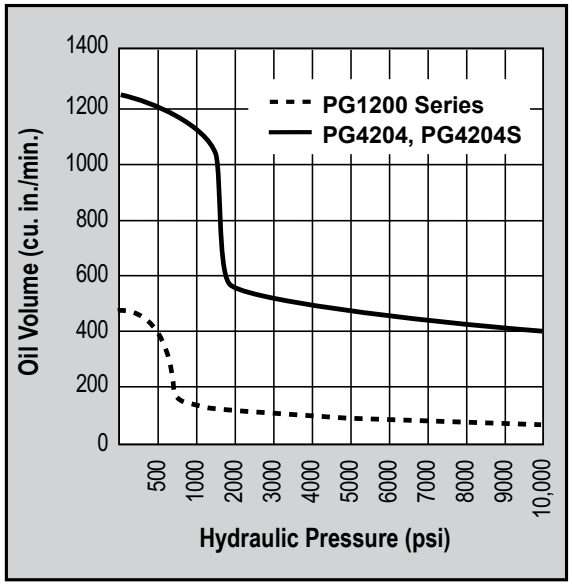

Ordering Information

For Use With Cylinder Type	Description	Order No.	Valve Type	Valve No.	Valve Function	Reservoir *Usable Oil Cap. (cu. in.)	Horsepower	Cycle
Single-Acting	Base model 5 1/2 hp gasoline pump with 5.7 gallon reservoir.	PG1203	3-Way	9520	Advance Hold Return	1,300	5.5	4
Double-Acting	Base model 5 1/2 hp gasoline pump, with 5.7 gallon reservoir, roll cage, and double-acting valve.	PG1204	4-Way	9506	Advance Hold Return	1,300	5.5	4
Double-Acting	5 1/2 hp gasoline pump, with 5.7 gallon reservoir, roll cage, solenoid valve, and 25 feet cord.	PG1204S	4-Way Solenoid***	9516	Advance Hold Return	1,300	5.5	4
Double-Acting	5 1/2 hp gasoline pump with 5.7 gallon reservoir, roll cage, load-lowering valve, 4 port manifold, gauge, and double-acting systems.	PG1200M-4D	4-Way Manifold	9506 9642	Advance Hold Return**	1,300	5.5	4
Double-Acting	Base model 20 hp pump with 20 gallon reservoir.	PG4204	4-Way	9506	Advance Hold Return	3,927	20	4
Double-Acting	20 hp pump with 20 gallon reservoir, and solenoid-operated remote valve.	PG4204S	4-Way Solenoid***	9516	Advance Hold Return	3,927	20	4

* Usable oil is calculated with oil fill at recommended level at 2.25" below cover plate.

** Control up to 4 cylinders independently.

*** Has 25 ft. remote control cord.

Model Shown:
24 Point MCS



Features

MOTION CONTROL SYSTEM

Whether it is a bridge, a building or any kind of heavy load, with the SPX Power Team Motion Control System, lifting, lowering, pushing, pulling, tilting or positioning loads can be carried out automatically with a high degree of accuracy.
The PLC-controlled system is a combination of digital actuation and digital control providing significant advantages such as time savings, repeatability, and extremely low internal stress in the object one is moving. The system also provides documentation for the movement performed.

EASY SETUP AND SUPPORTING OPTIONS

The MCS is available from 4 to 128-points, with a tilt function that uses the X-Plane with one reference to level an object through an easy-to-use touch screen HMI (human machine interface). Systems can also a include a VPN Router using a 3G or 4G sim card where, remote troubleshooting and system upgrade is possible. Many options are available for pump sizes with flows up to 120 cubic inches per minute. Weatherproofing options are available with some models including a thermostat temperature-controlled enclosure. There is also a data logging feature within the system settings, plug in your USB drive, and capture the lift data for post review.

The Power Team Motion Control System (MCS) can be used in many hydraulic applications where load position is critical, requiring cylinder synchronization.





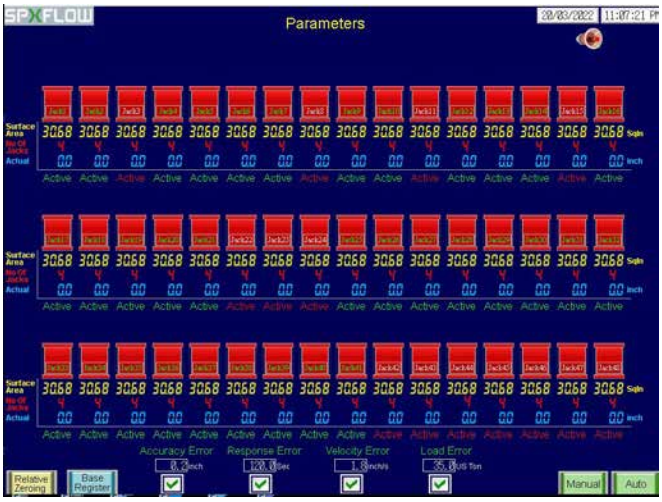

Training Provided



Every MCS includes one day of on-site training at one of SPX's Regional Headquarters (Rockford, IL USA, Singapore or the Netherlands).

Training includes both classroom and hands-on instruction. Travel & lodging not included.

Features

MCS SYSTEM

The Power Team MCS digitally controls the movement of an object, keeping it level within the user specified parameters to reduce internal stress. When a large object is stationary, internal stresses are normalized and when moved stresses are induced. The MCS controlled positioning minimizes the stresses created by lifting or lowering the object helping to increase safety for your team and the object.

EASY TO USE HMI TOUCH SCREEN INTERFACE

Control is as easy as inputting the height you want to move the object and start the cycle by selecting auto, up and hitting go. The MCS does the work while displaying the feedback you need to monitor a safe successful lift like; pressure per cylinder and distance traveled. The system has the capability to warn you of many potential hazards like, over pressure on a cylinder, line breaks, or out of tolerance warnings.

SAFETY FEATURES

The Power Team Motion Control System (MCS) has numerous safety features built into the digital controller which safely stop the movement in the event of an alarm In addition, there are backup mechanical features which function even in the event of a power loss.

Digitally Controlled Safety Features		Mechanical Backup Safety Features
Max load exceeded	Hydraulic pump overload	Posi-Check® load lowering valve to hold load and provide a mechanical backup to safely control the lowering of the load.
Max pressure exceeded	E-Stop button activation	
Max displacement exceeded	Pressure sensor wire break	
Datalog	Displacement sensor wire break	Manual lowering override to safely lower load in event of power loss.
System communication error	Accuracy, response velocity and load alerts	



CYLINDER SELECTION

Always choose a cylinder with a tonnage rating of 25%-100% more than what is required to lift or position the load. Working pressure of 5,000-8,000 PSI is recommended for MCS applications.





Features

- Systems include 4, 8, 12, 16, 24 jacking points, contact Power Team for larger MCS requirements up to 128 points and manifold systems up to 512 points.
- Positioning, lifting or lowering accuracy of +/- .040” (1 mm).
- Safety features included: full stop due to power failure, sensor failure, pressure overload, tolerance error, uncontrolled load movement, etc.
- Intuitive graphic, touch screen control.
- Displayed information included: startup diagnostics, position of lift points relative to starting position, pressure at each lift point, status of each cylinder and status of alarms.
- MCS works with a wide range of cylinder types, tonnages and strokes to meet your application requirements.
- Operating pressure (up to) 10,000 psi (700 bar).
- Easy setup and remote or on-site support

OPTIONAL FEATURES

Power Team offers a wide variety of single acting, double acting, lock nut, pancake and center hole cylinders to meet your requirements.

- Lockable enclosure
- Tool shelves
- Motor/pump sizes
- Distance sensor sizes
- Weather proofing
- Tilt feature
- Modem/router
- Custom HMI and functions

Model Shown:

8 Point MCS



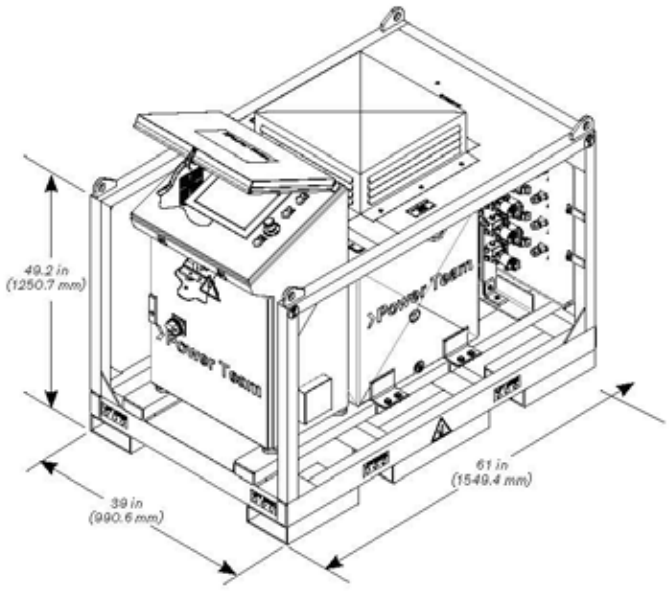

Hardware Included



Crate

Motion Control System (MCS) is protected with a robust cage and reusable shipping container.



Sensors

Linear Displacement Sensors have a range of 19.7” (500 mm) to 39.4” (1000 mm). (Provided in cases with 4 sensors each).



Cables

Standard cables for sensors are 100’ (30.5 m) in length, contact for custom sizes.



Plug

Electrical plug female connector allows for quick attachment to your line cord.

Ordering Information

Order No.	Max. Lift Points	Pump Flow	Reservoir Size gal (L)	Motor Voltage hp (VAC)	Control Voltage VDC	Max. Pressure psi (bar)	Valves Included	Transducers Included	Weight w/oil lb (kg)
Contact for order no.	128	55 in³ /min to 420 in³ / min @10,000 psi (0.9 L/min to 6.9 L/min @ 700 bar)	40 (150) to 100 (378.5)	1.125 (230) to 10 (230/460)	24	10,000 (700)	3P-4W and 2P-2W	Pressure and Linear Position	Varies per model

CHOOSE YOUR BASIC PUMP, SELECT YOUR ACCESSORIES, AND WE WILL ASSEMBLE, TEST AND SHIP YOUR PUMP.











ORDER A "CUSTOM BUILT" HYDRAULIC PUMP

"Assemble to Order" means you can choose a basic pump with gas, air or electric motor. Then select the proper valve, gauge, pressure control, motor control and reservoir. You get a two-stage pump that gives high oil volume for fast cylinder approach (and return with double-acting cylinders) in the first stage and high pressure in the second stage.

1 1-1⁄8 HP UNIVERSAL MOTOR

These motors start under full load and are suitable for operation up to 5,000 or 10,000 psi. The motor is 1-1/8 hp, 12,000 rpm, 115 or 230VAC (specify), 50/60 cycle AC single-phase (25 amp draw at 115VAC). With proper valve they can be used with single or double-acting cylinders.

NOTE: Remote control available.

2 1-1⁄2 HP JET MOTOR, SINGLE & THREE-PHASE

Feature low noise level, moderate speed for long service and are ideal for fixed applications. Motor is 1-1/2 hp, 3,450 rpm, 115 or 230VAC, 50 or 60 cycle (specify), AC single-phase with thermal overload switch. Can be used with single or double-acting cylinders and equipped with remote control.

NOTE: These do not start under full load unless valve is in "neutral" (requires open or tandem center valve) and are not recommended for frequent starting and stopping.

3 3 HP JET MOTOR, THREE-PHASE

Gives low noise level and long life due to its moderate operating speed. Ideal for fixed installations. Consists of basic 10,000 psi pump, jet pump motor: 3 hp, 3,450 rpm, 230/460VAC, 60 or 50 cycle (specify). AC three-phase, with thermal overload switch. Equipped with internal and external relief valve. Will start under load.

4 3 HP AIR MOTOR

This pump is ideal for use where electricity is unavailable or cannot be used. The 5,000 or 10,000 psi pump has a 3 hp air-driven motor at 3,000 rpm (optimum performance based on 80 psi air pressure and 50 cfm at the pump). You can drive single or double-acting cylinders with the correct valve.

NOTE: 80 psi air supply required to start under full load.

5 GASOLINE ENGINE

This version is perfect when electricity and air are unavailable. It is capable of continuous operation at full pressure. Consists of basic 10,000 psi pump, 4-cycle Briggs & Stratton "Diamond Edge" gasoline engine, developing 6 hp. As with all these pumps, this unit can be valved for use with either single or double-acting cylinders.

Performance Specifications

1

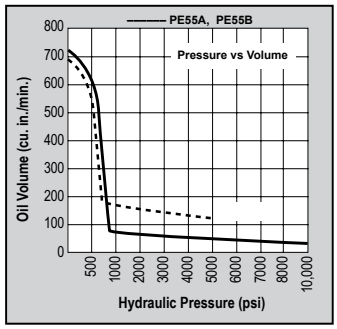

dBA @ Idle and 10,000 psi - 90/95
dBA @ Idle and 5,000 psi - 90/95

2

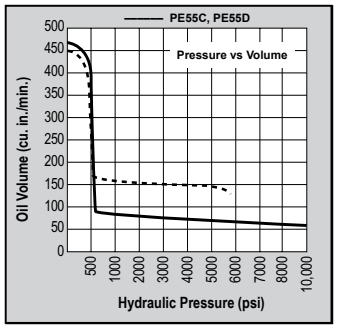

dBA @ Idle and 10,000 psi - 80/85

3

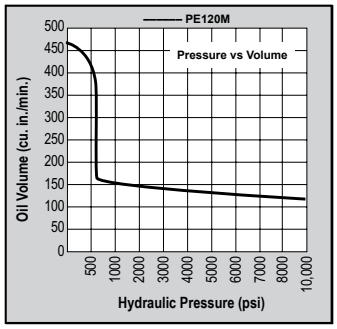

dBA @ Idle and 10,000 psi - 80/85

4

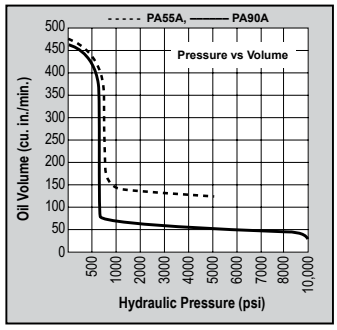

dBA @ Idle and 10,000 psi - 83/88
dBA @ Idle and 5,000 psi - 83/88

5

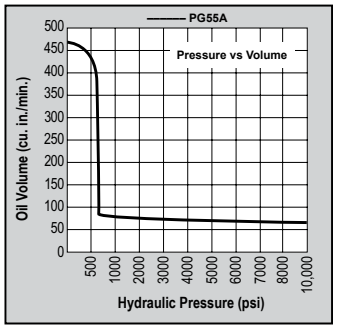

"ASSEMBLE TO ORDER" PUMP
HOW TO ORDER YOUR "CUSTOM" HYDRAULIC PUMP...

You can choose from pre-engineered, off-the-shelf components to customize your pump. All the components are listed in table form, with key letters or numbers on pages 109-110. Complete instructions guide you so you can determine what is needed to complete a pump assembly. Shown below is an example of a custom-built pump.

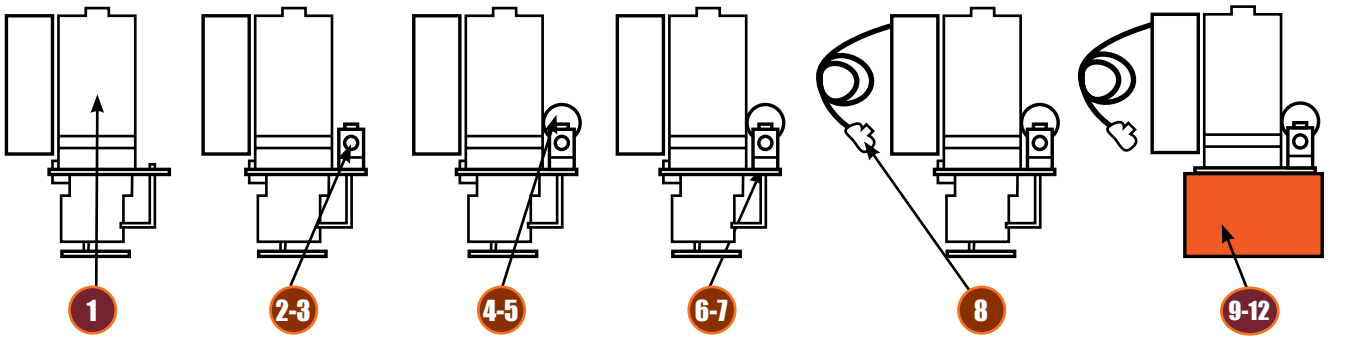

Pump No. PE55A–VV–Z–G–A–A–A–A–D–BB–C–2F is a 10,000 psi two-speed pump with a 115VAC, 50-60Hz, single-phase, 1-1/8 hp, 12,000 rpm motor; a 9512 4-way solenoid valve with a 202778 remote hand control, a 9041 pressure gauge, no gauge accessories, standard pressure control, standard On/Off/Pulse motor control, 40063OR9 2-gallon reservoir, a 350431 oil level/temperature gauge, 10494 casters, and 2 gallons of standard hydraulic oil.

See next two pages for pump components

TO BUILD YOUR PUMP, FILL IN KEY LETTERS FROM CHARTS

1 Basic Pump	2 Select Valve	3 Select Valve Control	4 Select Gauge	5 Select Gauge Accessory	6 Pressure Control
7 Pressure Switch	**8 Motor Control**	**9 Reservoir**	**10 Oil Level / Temp. Gauge**	**11 Choose Casters**	**12 Select Oil**

Use the charts numbered from 1-12 below to select the pump, valve, gauge and other accessories to suit your needs. For the pump, fill in the basic number plus key letter in block 1 above and the key letter only in the blocks 2-12 above for any of the other items. Refer to the appropriate pages in this catalog for more specific information on the products you need.

1 BASIC PUMP

BASIC PUMP NUMBERS					SPECIFICATIONS *NOTE: Customer must specify voltage required.*		
PE55 (10,000 psi)	PE120 (10,000 psi)	PA55 (10,000 psi)	PA90 (5,000 psi)	PG55 (10,000 psi)	Power Source	rpm	hp
A					115VAC-60 Hz, 1Ø	12,000	1.125
					110VAC-50 Hz, 1Ø	12,000	1.125
B					230VAC-60 Hz, 1Ø	12,000	1.125
					220VAC-50 Hz, 1Ø	12,000	1.125
C **					115VAC-60 Hz, 1Ø	3,450	1.5
C50 **					110VAC-50 Hz, 1Ø	2,850	1.5
D **					230VAC-60 Hz, 1Ø	3,450	1.5
D50 **					220VAC-50 Hz, 1Ø	2,850	1.5
	M60 *				208, 230/460VAC-60 Hz, 3Ø	3,450	3
	M50 *				220/380VAC-50 Hz, 3Ø	2,850	3
		A	A		Air Motor	3,000	3
				A	Gas Engine	3,600	6

* Voltage Specification Required.

** These pumps do not start under full load unless valve is in "neutral" position (requires open or tandem center valve) and are not recommended for frequent starting and stopping.

2 VALVE

Manifold / Manual / Air-Operated Directional Valves		Function
AB	9628 manual, tandem center	4-way, 3-pos. valve
AC	9632 manual "twin" tandem and open center	
A	None	—
B	9626 manifold	Manifold 3-way, 2-pos. valve
C	9584 manual	
D	9582 manual	
E	9610 automatic, pilot-operated	
G	9504 manual	3/4-way, 2-pos. valves
JJ	9594 air-operated	
L	9502 manual, closed center "non-interflow"	3-way, 3-pos. valve
M	9520 manual, tandem center Posi-Check®	

Manifold / Manual / Air-Operated Directional Valves		Function
O	9609 manual, pressure compensated flow control	3-way, 4-pos.
R	9506 manual, tandem center Posi-Check®	4-way, 3-pos. valves
RR	9511 manual, open center	
S	9500 manual, tandem center	
T	9507 manual, closed center Posi-Check®	
U	9501 manual, closed center	
Solenoid-Operated Directional Valves		**Function**
FF	9569 solenoid-operated - 24VAC	3-way, 2-pos.
HH	9572 solenoid-operated - 24VAC	3/4-way, 2-pos.
PP	9599 solenoid-operated - 24VAC	3-way, 3-pos.
VV	9512 solenoid-operated - 24VAC	4-way, 3-pos. valves
WW	9615 solenoid-operated - 24VAC	

3 VALVE CONTROL

Valve Remote Control		Use with Valve
A	None	–
X	304718 remote hand control, 10 ft.	9572
XF	309652 remote foot control, 10 ft.	9572
Y	202777 remote hand control, 10 ft.	9569 or 9599

Valve Remote Control		Use with Valve
Z	202778 remote hand control, 10 ft.	9512 or 9615
ZF	309653 remote foot control, 10 ft.	9512, 9615, 9569 or 9599
ZZ	209593 remote hand control, 12 ft.	9594

4 GAUGE

Pressure Gauge	
A	None
B	Other – Specify
G	9041 0-10,000 psi – 0-689 Bar (2.5" diameter)
H	9040 0-10,000 psi – 0-689 Bar (Liquid) (2.5" diameter)
J	9051 0-10,000 psi – 0-689 Bar (4" diameter)
M	9052 0-10,000 psi – 0-689 Bar (Liquid) (4" diameter)

5 GAUGE ACCESSORY

Gauge Accessories	
A	None
N	9049 pulsation dampener – All dry gauges

6 PRESSURE CONTROL

Pressure Controls	
A	With standard external pressure regulator
C	Other – specify
D	350199 premium external pressure regulator. See Power Team Catalog product No. 9633 for details.

NOTE: Pressure controls are factory pre-set at 10,000 psi unless otherwise specified.

7 PRESSURE SWITCH

Pressure Switch	
A	None
B	9625 electric pressure switch (500-10,000 psi) **NOTE:** Pressure switch is factory pre-set at 10,000 psi unless otherwise specified.
C	9641 pilot-operated air control valve – Normally closed
D	9643 pilot-operated air control valve – Normally opened

8 MOTOR CONTROL

Electric Motor Controls	
A	Standard On/Off/Pulse control (does not include remote switch) for A, B, C, D, F and M electric pumps. Also used for remote controlled solenoid valves.
B	None
C	25017 remote motor hand switch, 10 ft.
D	203225 remote motor hand switch, 10 ft. (heavy-duty)
E	10461 remote motor foot switch, 10 ft.
Air Motor Controls	
AA	Other – specify
B	None
P	27876 hand motor control (for PA55 & PA90 series)
Q	27877 foot motor control (for PA55 & PA90 series)

9 RESERVOIR

Reservoir		Capacity
A	None	–
B	Other – Specify	–
D	40063OR9 – PE55, PE120, PA55 and PA90 series	2.5 gal.
E	61165† – PE55, PE120, PA55 and PA90 series	2 gal.
	(Oil temperatures in excess of 150˚ F. may cause permanent failure of the thermoplastic reservoir)	
F	RP22‡ – PE55, PE120, PA55 and PA90 series	2.5 gal.
H	61799OR9. Same as D except with drain port	2.5 gal.
J	RP50 – PE55, PE120, PA55 and PA90 series	5 gal.
K	40137OR9 – PG55 series	5 gal.
P	209124 – PE55, PE120, PA55 and PA90 series	7 gal.
V	RP100 – PE55, PE120, PA55 and PA90 series	10 gal.
W	RP101 – PG55 series	10 gal.

NOTE: Includes cover adapter and misc. accessories when applicable.
† High density polyethylene.
‡ Aluminum.

10 OIL LEVEL / TEMP. GAUGE

Oil Level / Temperature Gauge	
A	None
BB	350431 oil level/temperature gauge

11 CASTERS

Casters	
A	None
BB	10494 caster for use with 40063OR9 reservoir (Specify quantity of four)

12 OIL

Hydraulic Oil		Capacity
E	Ship pump without oil	–
F	9637 Standard hydraulic oil	1 gal.
G	9638 Standard hydraulic oil	2.5 gal.
Q	9639 Flame-Out® hydraulic oil	1 gal.
R	9640 Flame-Out® hydraulic oil	2.5 gal.
U	9645 Biodegradable hydraulic oil	1 gal.
V	9646 Biodegradable hydraulic oil	2.5 gal.

NOTE: Select type of hydraulic oil and specify quantity.

Return to Top

HYDRAULIC ACCESSORIES

SELECT FROM A WIDE RANGE OF HYDRAULIC ACCESSORIES TO COMPLETE YOUR SYSTEM REQUIREMENTS

- Power Team offers the widest selection of pump-mounted, remote or in-line valves to control your hydraulic circuit requirements.
- A wide variety of hose types, sizes and configured arrangements in rubber or polyurethane
- High pressure fittings, gauges, and other miscellaneous accessories to fit your needs



POWERTHON LIFETIME WARRANTY



Section	Page Content	Pages
Introduction	Choosing the Right Valve and Circuit Schematics	111-114
Valves	Valve Selection / Pump Options Pump-Mounted Hydraulic Pump Accessories Remote-Mounted In-Line	115-116 117-124 125-126 127-128 129-131
Fluids	Standard Hydraulic Oil, Flame Out®, Bio Degradable, Low Temperature	131
Pump Accessories	Motor Controls, Sub-plates, Air Filter / Regulator / Lubricator, Pressure Switch, Air Control Valves, Oil Cooler Kits, Reservoir Breather Kits, Casters, Fluid Level / Temp. Gauge, Foot Control Guard, Magnetic Strip, Seal Kits, Carts / Roll Cages, Reservoirs	133-134
Hoses	Rubber, Wire-Braid Polyurethane Non-Conductive	135-137
Couplers	Quick-Connect, Flush Face	138
Analog Gauges	Filled / Unfilled	139
Lifting Modules	Single-Acting / Double-Acting	140
Digital Gauges	10,000 PSI / 21,750 PSI	141-142
Fittings	Connectors, Couplings, Crosses, Elbows, Tees, Swivels, Special Adapters	143
Manifolds	Connectors, Couplings, Crosses, Elbows, Tees, Swivels, Special Adapters	144



SELECTING THE RIGHT VALVE:

Step 1: What is the tool requirement for valve control - single or double-acting?

Step 2: Determine how you intend to plumb the valve in hydraulic circuit - mounted or remote?

Step 3: How will you operate it - manual or remote? What type of directional control is needed?

VALVE SIZING CONSIDERATIONS:

- Will the valve be used with single or double-acting cylinders?
- Will the valve be mounted on the pump, away from the pump or directly into the hydraulic lines?
- Will the valve be manually-operated or is remote control preferred?
- Is independent control of multiple cylinders, or hydraulic tools preferred?
- What directional control and pressure control valve functions are needed for the application?

Note: Basic valve types include manually-operated, air or solenoid-operated and pilot-operated. Special application valves for pre-stressing and post-tensioning are also offered. Consult valve selection chart on pages 115-116 for listings of all Power Team valves.

DIRECTIONAL CONTROL VALVES

2-WAY, 2-POSITION

(FOR CONTROL OF SINGLE-ACTING CYLINDERS)

POSITION 1	CENTER POSITION	POSITION 2
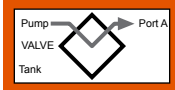 Oil goes from pump to cylinder. Pressure is held from valve to cylinder when pump is shut-off.	None	 Oil goes from cylinder to pump. Pressure is released to reservoir when motor is turned off.

3-WAY, 2-POSITION

(FOR CONTROL OF SINGLE-ACTING CYLINDERS)

POSITION 1	CENTER POSITION	POSITION 2
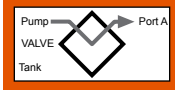 Oil goes from pump to cylinder and holds when pump is shut-off. Return line to reservoir is blocked.	None	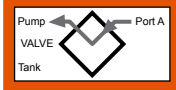 Cylinder retracts, oil returns to reservoir.

3-WAY, 3-POSITION

(FOR CONTROL OF SINGLE-ACTING CYLINDERS)

POSITION 1	CENTER POSITION	POSITION 2
 Oil goes from pump to cylinder and holds when pump is shut-off. Return line to reservoir is blocked.	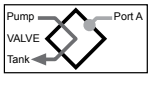 Cylinder pressure is held. Pump can remain running and oil returns to reservoir.	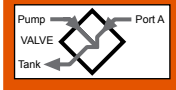 All oil is open to reservoir through return line.

IN-LINE HYDRAULIC VALVES

Load-Lowering Valve – Provides precision metering for controlled return of the cylinder piston.

Sequence Valve – Used when a cylinder in a multiple cylinder application must advance before any other.

Pressure Reducing Valve – Permits independent pressure control to two or more, clamping systems operated by a single power source.

Shut-off Valve – For fine metering of hydraulic oil. Several may be used to control multiple single-acting cylinders.

Check Valve – Permits flow of hydraulic oil in one direction only.

Pressure Relief Valve – Used at remote locations in a hydraulic circuit where maximum pressure requirements are less than the setting of the basic overload valve in the pump. Protects a hydraulic system against over pressurization.

Metering Valve – Restricts surges by restricting flow to a certain level. When flow subsides, valve reopens automatically. For systems using large cylinders or extended lengths of hose.

Pressure Regulator Valve – Permits external adjustment of operating pressures at various values below the internal relief valve setting of the pump.

⚠ CAUTION: To prevent sudden, uncontrolled descent of a load as it is being lowered, use a 9596 Load-Lowering Valve or 9720 Counter Balance Valve in conjunction with the directional valve used in your application.

DIRECTIONAL CONTROL VALVES

4-WAY, 2-POSITION

(FOR CONTROL OF SINGLE-ACTING CYLINDERS)

POSITION 1	CENTER POSITION	POSITION 2
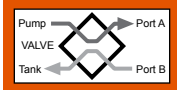 Oil goes to the “extend” side of the cylinder. The oil from the “retract” side returns to reservoir. Cylinder holds with pump shut-off.	None	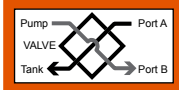 Oil goes to the “retract” side of the cylinder, oil from the “extend” side returns to reservoir.

4-WAY, 3-POSITION

(FOR CONTROL OF DOUBLE-ACTING CYLINDERS)

POSITION 1	CENTER POSITION	POSITION 2
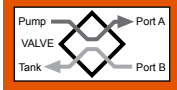 Oil goes to the “extend” side of the cylinder, oil from the “retract” side returns to reservoir. Cylinder holds with pump shut-off.	 Holds pressure even if pump is running. Oil from pump goes through valve, back to reservoir.	 Oil goes to “retract” side of cylinder. Oil from “extend” side returns to the reservoir.

TYPICAL CENTERS

TANDEM CENTER	CLOSED POSITION	OPEN CENTER
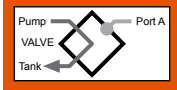 Cylinder ports are blocked, oil from pump goes to reservoir. Used when pump remains running. Example: gasoline-driven pumps.	 Generally used when running multiple valves in series from one pump.	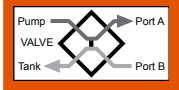 Open Center used when holding is not a requirement, as when running two separate hydraulic tools such as cutters / crimpers.

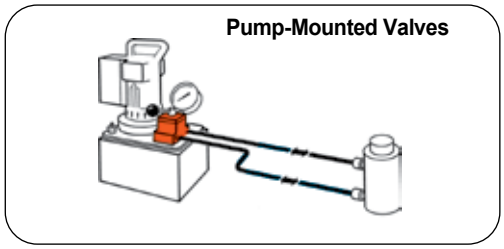

Order No.	Page No.	Cylinder* Applications	Operation	Valve Type	Volt	Advance / Return	Advance / Hold Return	**Posi-Check® Feature
9500	120	SA / DA	Manual	4-Way, 3-Pos. Tandem Center	—	No	Yes	No
9501	120	SA / DA	Manual	4-Way, 3-Pos. Closed Center	—	No	Yes	Yes
9502	119	SA	Manual	3-Way, 3-Pos. Closed Center	—	No	Yes	Yes
9504	118	SA / DA	Manual	3/4-Way, 2-Pos.	—	Yes	Yes	No
9506	120	DA	Manual	4-Way, 3-Pos. Tandem Center	—	No	Yes	Yes
9507	120	DA	Manual	4-Way, 3-Pos. Closed Center	—	No	Yes	Yes
9511	120	SA / DA	Manual	4-Way, 3-Pos. Open Center	—	Yes	Yes	No
9512	123	DA	Solenoid	4-Way, 3-Pos. Tandem Center	24	No	Yes	Yes
9513	123	DA	Solenoid	4-Way, 3-Pos. Tandem Center	115	No	Yes	Yes
9516	123	DA	Solenoid	4-Way, 3-Pos. Tandem Center	12	No	Yes	Yes
9517	118	SA	Manual	2-Way, 2-Pos.	—	No	Yes	No
9519	123	DA	Solenoid	4-Way, 3-Pos. Tandem Center	230	No	Yes	Yes
9520	119	SA	Manual	3-Way, 3-Pos. Tandem Center	—	No	Yes	Yes
9522	123	DA	Solenoid	4-Way, 3-Pos. Open Center	230	Yes	No	No
9523	123	SA	Pilot-Operated Solenoid	3-Way, 2-Pos.	230	Yes	No	No
9552	122	SA / DA	Solenoid	3/4-Way, 2-Pos.	230	Yes	No	No
9553	123	SA	Pilot-Operated Solenoid	3-Way, 2-Pos.	24	Yes	No	No
9569	122	SA	Solenoid	3-Way, 2-Pos.	24	No	Yes	No
9570	122	S.A.	Solenoid	3-Way, 2-Pos.	230	No	Yes	No
9572	122	SA / DA	Solenoid	3/4-Way, 2-Pos.	24	Yes	No	No
9579	122	SA	Solenoid	3-Way, 2-Pos.	115	No	Yes	No
9582	117	SA	Manual	3-Way, 2-Pos.	—	No	Yes	No
9584	117	SA	Manual	3-Way, 2-Pos.	—	No	Yes	No
9589	123	SA	Pilot-Operated Solenoid	3-Way, 2-Pos.	115	Yes	No	No
9590	123	DA	Solenoid	4-Way, 3-Pos. Open Center	115	Yes	No	No
9592	122	SA / DA	Solenoid	3/4-Way, 2-Pos.	115	Yes	No	No
9594	122	SA / DA	Air	3/4-Way, 2-Pos.	—	No	Yes	Yes
9599	121	SA	Pilot-Operated Solenoid	3-Way, 3-Pos. Tandem Center	24	No	Yes	Yes
9605	121	SA	Pilot-Operated Solenoid	3-Way, 3-Pos. Tandem Center	115	No	Yes	Yes
9609	121	SA	Manual	3-Way, 3-Pos. Tandem Center	—	No	Yes	No
9610	117	SA	Auto Pilot-Operated	3-Way, 2-Pos.	—	Yes	No	No
9610A	117	SA	Manual	2/3-Way, 2-Pos.	—	No	Yes	No
9615	123	DA	Solenoid	4-Way, 3 Pos. Open Center	24	Yes	No	No
9628	124	SA / DA	Manual	Post-Tensioning	—	Special	No	No
9632	124	SA / DA	Manual	Post-Tensioning	—	Special	No	No

Note:

* "SA" represents single-acting cylinders and "DA" represents double-acting cylinders.
** The Posi-Check® feature guards against pressure loss when shifting from "advance" to "hold" position.

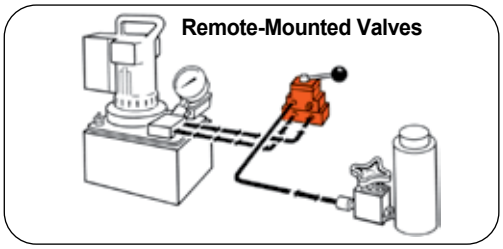

Order No.	Page No.	Cylinder Applications*	Operation	Valve Type	Volt	Advance / Return	Advance / Hold Return	**Posi-Check® Feature
9508	128	SA / DA	Manual	4-Way, 3-Pos. Closed Center	—	No	Yes	Yes
9509	128	SA / DA	Manual	4-Way, 3-Pos. Tandem Center	—	No	Yes	Yes
9514	128	DA	Solenoid	4-Way, 3-Pos. Tandem Center	115	No	Yes	Yes
9524	127	SA / DA	Solenoid	3/4-Way, 2-Pos.	230	No	Yes	No
9525	128	DA	Solenoid	4-Way, 3-Pos. Tandem Center	230	No	Yes	Yes
9526	128	SA	Solenoid	3-Way, 2-Pos.	230	No	Yes	No
9554	127	SA / DA	Solenoid	3/4-Way, 2-Pos.	24	No	Yes	No
9555	128	DA	Solenoid	4-Way, 3-Pos. Tandem Center	24	No	Yes	Yes
9556	128	SA	Solenoid	3-Way, 2-Pos.	24	No	Yes	No
9559	128	SA	Solenoid	3-Way, 2-Pos.	115	No	Yes	No
9593	127	SA / DA	Solenoid	3/4-Way, 2-Pos.	115	No	Yes	No
9595	127	SA / DA	Air	3/4-Way, 2-Pos.	—	No	Yes	No

Note:

" SA" represents single-acting cylinders and "DA" represents double-acting cylinders.
** The Posi-Check® feature guards against pressure loss when shifting from "advance" to "hold" position.

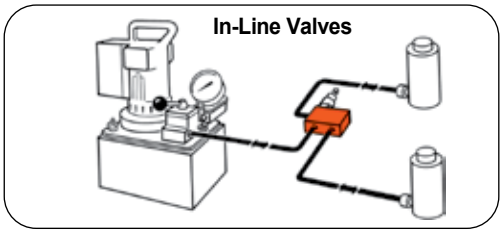

Order No.	Page No.	Cylinder Applications*	Operation	Valve Type
9575	131	SA	Manual	Shut-Off Valve
9580	131	SA	Automatic	One-Way Check Valve
9581	131	SA / DA	Automatic	Pilot-Operated Check Valve
9596	129	SA	Manual	Load-Lowering Valve
9597	129	SA / DA	Automatic	Sequence Valve
9608	129	SA / DA	Automatic	Pressure Reducing Valve
9623	131	SA / DA	Automatic	Pressure Relief Valve
9631	130	SA / DA	Automatic	Metering Valve
9633	130	SA / DA	Automatic	Pressure Regulator Valve
9720	129	SA / DA	Automatic	Counter Balance Valve
9721	129	SA / DA	Automatic	Counter Balance Valve
RV21278	130	—	Automatic	Relief Valve

Note:

* "SA" represents single-acting cylinders and "DA" represents double-acting cylinders.

3-WAY / 2-POSITION MANUAL VALVES

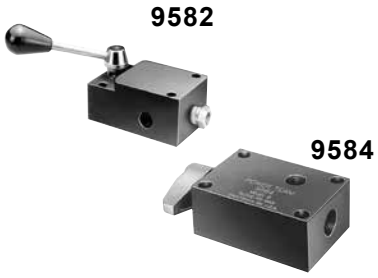

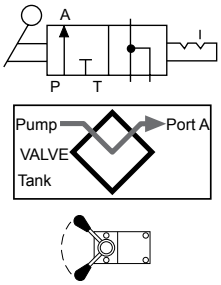

Applications: Single-acting cylinders.

Actuation: Lever-operated.

Functions: Cylinder piston "advance," "hold" and "return."

Used on these pumps: P460, PE17, PE21, PE30, PE46, PE55, and PE120 series.

Order No.	Description
9582	3-Way/2-Position manual valve. Wt., 2.5 lbs.
9584	3-Way/2-Position manual valve "flipper" control. Wt., 1.8 lbs.

3-WAY / 2-POSITION PILOT-OPERATED AUTOMATIC VALVES



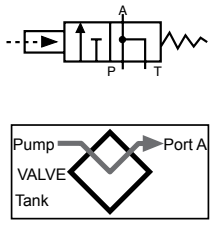

Applications: Single-acting cylinders.

Actuation: Pilot oil.

Functions: When pump is started, pilot oil automatically closes valve and directs oil to cylinder. When pump is stopped, valve automatically opens and oil returns to reservoir.

Used on these pumps: Furnished with pilot lines and adapters for PA55, PA90, PE30, PE55, and PE120 series.

Order No.	Description
9610	3-way/2-position pilot-operated automatic valve. Wt., 4.2 lbs.

2/3-WAY/2-POSITION MANUAL/PILOT-OPERATED AUTOMATIC VALVE



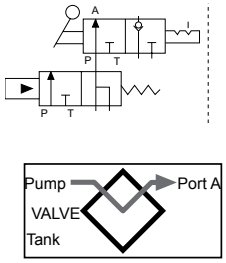

Applications: Manual operation for load lifting and holding with single-acting cylinders; automatic "dump" for operating hydraulic tools.

Actuation: Flipper lever/pilot oil.

Functions: With lever in closed position, valve will hold the load. When lever is "open," valve functions as a true automatic "dump" valve..

Used on these pumps: Furnished with pilot lines and adapters for PA55, PA90, PE30, PE55, and PE120 series. For application on other pumps, consult factory.

Order No.	Description
9610A	2/3-way/2-position manual/pilot-operated automatic valve. Wt., 4.4 lbs.

⚠CAUTION: To prevent sudden, uncontrolled descent of a load as it is being lowered, use a 9596 Load-Lowering Valve or 9720 Counter Balance Valve in conjunction with the directional valve used in your application.
IMPORTANT: Conversion kit 251528 must be used when mounting any of the valves on this page on PA17 or PE17 pumps.
IMPORTANT: When ordering any valve for a PE30 or PG30 series pump, 1/2" longer mounting screws are required. For valves 9504, 9584, 9610 and 9610A, order four 12001 cap screws. For valve 9582, order two 12001 and two 10856 cap screws.

2-WAY/2-POSITION MANUAL VALVE



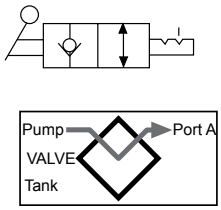

Applications: Single-acting cylinders.

Actuation: Flipper lever-operated.

Functions: Cylinder piston "advance," "hold" and "retract.".

Used on these pumps: PE172 and PA172.

Order No.	Description
9517	2-way/2-position manual valve. Wt., 3.2 lbs.

3/4-WAY/2-POSITION MANUAL VALVE



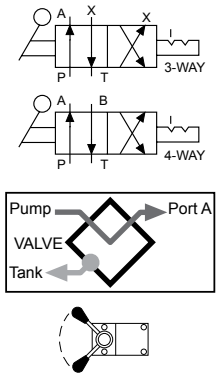

Applications: Single or double-acting cylinders.

Actuation: Lever-operated, detent-positioned.

Functions: Pos. 1 – Oil is directed to "advance" side of cylinder, oil from "retract" side goes to reservoir, cylinder "holds" with pump shut-off. Pos. 2 – Oil goes to "retract" side of cylinder, cylinder "holds" with pump shut-off. When using as a 3-way valve for single-acting cylinders, port "A" or "B" is plugged. See note below regarding plugging of ports and resulting heat build-up..

Used on these pumps: P460, PA6D, PA17, PA46, PA55, PA60, PE17, PE21, PE30, PE46, PE55, PE120, PE400, PQ60 and PQ120 series.

Order No.	Description
9504	3/4-way/2-position manual valve. Wt., 4.2 lbs.

NOTE: 9504 can be remote-mounted with a 9510 sub-plate.

⚠CAUTION: To prevent sudden, uncontrolled descent of a load as it is being lowered, use a 9596 Load-Lowering Valve or 9720 Counter Balance Valve in conjunction with the directional valve used in your application.
IMPORTANT: Conversion kit 251528 must be used when mounting any of the valves on this page on PA17 or PE17 pumps.
IMPORTANT: When ordering any valve for a PE30 or PG30 series pump, 1/2" longer mounting screws are required. For valves 9504, 9584, 9610 and 9610A, order four 12001 cap screws. For valve 9582, order two 12001 and two 10856 cap screws.
NOTE: Valves 9501, 9502, 9504 and 9507 can have a port blocked or have a closed center position. When a port is blocked and the valve is shifted to the blocked port, the pump will generate excessive heat. An electric or rotary air pump can either be turned off manually or with a pressure switch. Reciprocating air pumps may be adjusted to stall out and stop.

3-WAY/3-POSITION (CLOSED CENTER) NON-INTER FLOW MANUAL VALVE WITH POSI-CHECK®



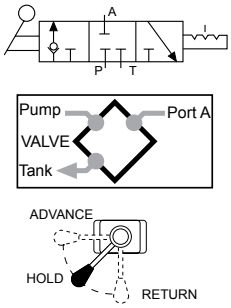

Applications: Single-acting cylinders.

Actuation: Lever-operated, detent-positioned.

Functions: Pos. 1 – Oil is directed from pump to cylinder and "holds" with pump shut-off, line to reservoir is blocked. Pos. 2 – All oil is open to reservoir through tank line. Center Pos. – Cylinder pressure is held, and pump should be shut-off.

Used on these pumps: P460, PA17, PA46, PA55, PA60, PE17, PE21, PE30, PE46, PE55, PE120, PE400, PQ60 and PQ120 series.

Order No.	Description
9502	3-way/3-position (closed center) manual valve. Wt., 4.2 lbs.

NOTE: A pressure switch and/or gauge may be attached if desired. Also, the 9502 can be remote-mounted if a 9510 sub-plate is used.

3-WAY/3-POSITION (TANDEM CENTER) MANUAL VALVE WITH POSI-CHECK® VALVE



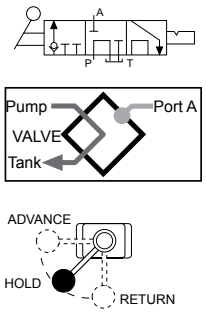

Applications: Single-acting cylinders.

Actuation: Lever-operated, detent-positioned.

Functions: "Advance," "hold" and "return." When shifted to "return" position, pump and cylinder return oil through their own separate return lines, allowing faster retraction of piston. The Posi-Check® feature guards against pressure loss when shifting from "advance" to "hold" position.

Used on these pumps: P460, PA17, PA46, PA55, PE17, PE21, PE30, PE46, PE55, PE120, PQ60, PQ120, PE400, PG30, PG55, PG120 and PG400 series.

Order No.	Description
9520	3-way/3-position (tandem center) manual valve. Wt., 5.1 lbs.

⚠ CAUTION: To prevent sudden, uncontrolled descent of a load as it is being lowered, use a 9596 Load-Lowering Valve or 9720 Counter Balance Valve in conjunction with the directional valve used in your application.
NOTE: Valves 9501, 9502, 9504 and 9507 can have a port blocked or have a closed center position. When a port is blocked and the valve is shifted to the blocked port, the pump will generate excessive heat. An electric or rotary air pump can either be turned off manually or with a pressure switch. Reciprocating air pumps may be adjusted to stall out and stop.
NOTE: Gauge ports monitor pump pressure only, not pressure to the hydraulic cylinder(s).
IMPORTANT: Conversion kit 251528 must be used when mounting any of the valves on this page on PA17 or PE17 pumps.
IMPORTANT: When ordering any valve for a PE30 or PG30 series pump, 1/2" longer mounting screws are required. For valves 9502 and 9520, order four 12001 cap screws. For valve 9576, order four 17428 cap screws.

4-WAY/3-POSITION (TANDEM CENTER) VALVE WITH POSI-CHECK®



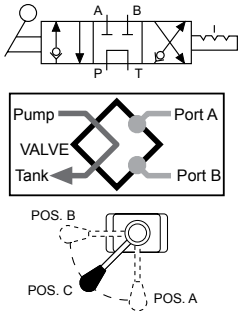

Applications: Single or double-acting cylinders.

Actuation: Lever-operated, detent-positioned.

Functions: "Advance," "hold" and "return." The Posi-Check® feature guards against pressure loss when shifting from "advance" to "hold" position.

Used on these pumps: P460, PA6D, PA17, PA46, PA55, PE17, PE21, PE30, PE46, PE55, PE84, PE120, PE400, PED, PG30, PG55, PG120, PG400, PQ60 and PQ120 series.

Order No.	Description
9506	4-way/3-position (tandem center) manual valve. Wt., 5.1 lbs.

4-WAY/3-POSITION (TANDEM CENTER) AND (OPEN-CENTER) MANUAL VALVES



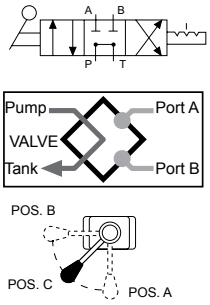

Applications: Single or double-acting cylinders.

Actuation: Lever-operated, detent-positioned.

Functions: The 9500 provides "advance," "hold" and "return." The 9511 (open center) valve can be used if holding is not a requirement, as when running two separate hydraulic tools. Provides "advance" and "return" only.

Used on these pumps: P460, PA17, PA46, PA55, PE17*, PE21, PE30, PE46, PE55, PE120, PE400, PG30, PG55, PG120, PG400, PQ60 and PQ120 series.

*Does not mount without 251528.

Order No.	Description
9500	4-way/3-position (tandem center) manual valve. Wt., 4.2 lbs.
9511	4-way/3-position (open center) manual valve. Wt., 4.2 lbs.

4-WAY/3-POSITION (CLOSED CENTER) MANUAL VALVE WITH POSI-CHECK®



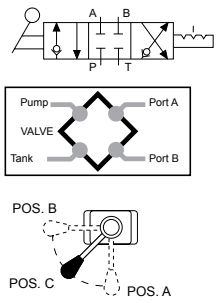

Applications: Single or double-acting cylinders.

Actuation: Lever-operated, detent-positioned.

Functions: Similar to 9506, but is a closed center valve with Posi-Check® . Generally used to operate multiple cylinders with a single pump. Provides "advance," "hold" and "return." The Posi-Check® feature guards against pressure loss when shifting from the "advance" to "hold" position. See note below regarding plugging of ports and resulting heat build-up.

Used on these pumps: P460, PA17, PA46, PA55, PA60, PA6D, PE17, PE21, PE30, PE46, PE55, PE120, PE400, PQ60 and PQ120 series.

Order No.	Description
9507	4-way/3-position (closed center) manual valve. Wt., 5 lbs.

4-WAY/3-POSITION (CLOSED CENTER) MANUAL VALVE

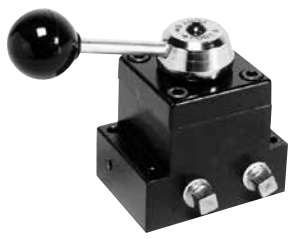

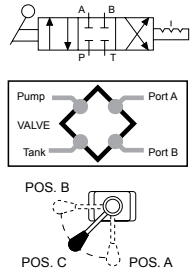

Applications: Single or double-acting cylinders.

Actuation: Lever-operated, detent-positioned.

Functions: "Advance," "hold" and "return." Closed center design makes valve suitable for operating multiple cylinders from a single pump. See note below regarding plugging of ports and resulting heat build-up.

Used on these pumps: P460, PA17, PA46, PA55, PA60, PE17, PE21, PE30, PE46, PE55, PE120, PE400, PQ60 and P120 series.

Order No.	Description
9501	4-way/3-position (closed center) valve. Wt., 4.2 lbs.

NOTE: All valves on this page may be remote-mounted with a 9510 sub-plate. Valves 9501, 9502, 9504 and 9507 can have a port blocked or have a closed center position. When a port is blocked and the valve is shifted to the blocked port, the pump will generate excessive heat. An electric or rotary air pump can either be turned off manually or with a pressure switch. Reciprocating air pumps may be adjusted to stall out and stop.

3-WAY/3-POSITION (TANDEM CENTER) SOLENOID VALVES WITH POSI-CHECK®

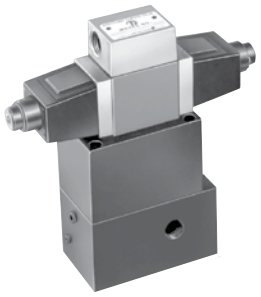

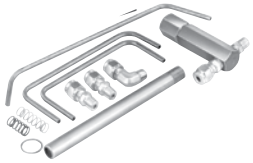

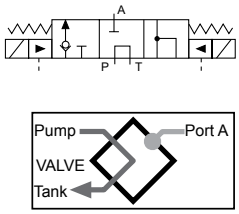

Applications: Single-acting cylinders.

Actuation: Solenoid-operated: 9605 is 115VAC, 50/60 Hz; 9599 is 24VAC, 50/60 Hz.

Functions: "Advance," "hold" and "return" positions. When in "advance," solenoid "B" is energized and oil goes from pump to cylinder through pressure port. In "return" position, solenoid "A" is energized and oil is directed from cylinder and pump to reservoir. With both solenoids de-energized, in "hold" position, oil from pump is directed back to reservoir while oil is checked in cylinder. The Posi-Check® feature holds load when shifting from "advance" to "hold" position.

Used on these pumps: Furnished with pilot lines and adapters for PE55, PE30 (carrying handles must be removed) and PE120 series. For application on other models, consult factory.

Order No.	Description
9605	3-way/3-position (tandem center) solenoid valve, 115VAC, 50/60 Hz. Wt., 14.0 lbs.
9599	3-way/3-position (tandem center) solenoid valve, 24VAC, 50/60 Hz. Wt., 14.0 lbs.

NOTE: Valves above are shipped without controls. Use 202777 remote hand control. Consult factory for field installation.

3-WAY/4-POSITION MANUAL PRESSURE COMPENSATED VALVE

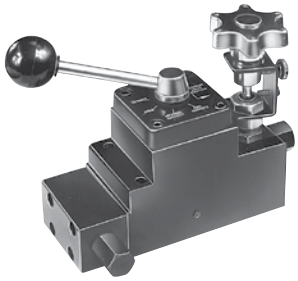

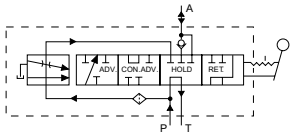

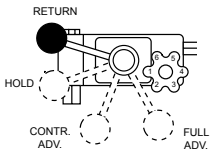

Applications: Single-acting cylinders. Primarily for use in testing soil, rock, concrete, asphalt and related engineering materials.

Actuation: Lever and adjustable, pressure compensated flow control valve.

Functions: Cylinder piston "return," "hold," "controlled advance" (pressure compensated) and "advance" (full flow). Will deliver a relatively constant flow regardless of pressure between 1,000 and 10,000 psi.

Used on these pumps: PA17, PA46, PA55, PE17, PE21, PE30*, PE46, PE55, PE200, PE400, PG30*, PG55, PG120, PG400, PQ60 and PQ120 series. * NOTE: Adapter kit 252161 is required for mounting this valve to a PE30 or PG30 series pump.

Order No.	Description
9609	3-way/4-position manual pressure compensated valve. Wt., 8.7 lbs.

PRESSURE COMPENSATED VALVE PERFORMANCE CHART

FLOW

Full flow position - 5 gpm (Ref.)
Metered advance position
65 cu. in./min. (Max.)

PRESSURE

Min. working pressure - 1,000 psi.
Max. working pressure- -10,000 psi.
Max. valve case pressure - 500 psi.

Chart to the right reflects valve performance when "metered advance" position is selected.

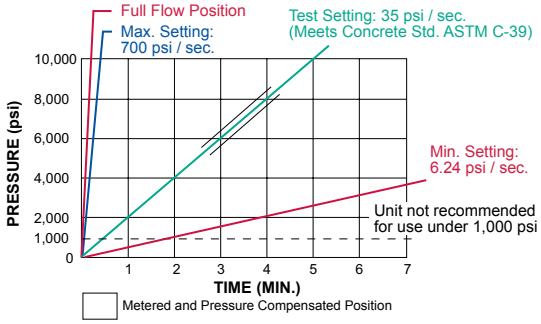

CAUTION: To prevent sudden, uncontrolled descent of a load as it is being lowered, use a 9596 Load-Lowering Valve or 9720 Counter Balance Valve in conjunction with the directional valve used in your application.
IMPORTANT: Conversion kit 251528 must be used when mounting the 9609 valve on PA17 or PE17 pumps.
IMPORTANT: When ordering any valve for a PE30 or PG30 series pump, 1/2" longer mounting screws are required. For valves 9500, 9501 and 9511, order four 12001 cap screws. For valve 9552, 9506, and 9507, order four 11956 cap screws. For valves 9599 and 9605, order four 251078 cap screws. For valve 9609, order four 10855 cap screws.

3-WAY/2-POSITION SOLENOID VALVE



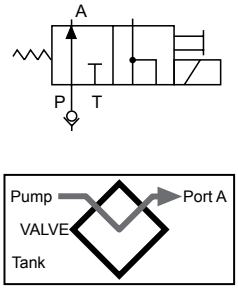

Applications: Single-acting cylinders.

Actuation: Solenoid-operated, 115VAC, 50/60 Hz.

Functions: Cylinder piston advances when solenoid is de-energized and pump is running. When solenoid is energized, oil is directed to reservoir, and piston returns. For "hold" position, pump is stopped with solenoid de-energized.

Used on these pumps: PE17, PE21, PE30, PE46, PE55, PE120, PE400, PQ60 and PQ120 series.

Order No.	Description
9579	3-way/2-position solenoid valve, 115VAC, 50/60 Hz., Wt. 9.6 lbs.
9569	3-way/2-position solenoid valve, 24VAC, 50/60 Hz., Wt. 9.6 lbs.
9570	3-way/2-position solenoid valve, 230VAC, 50/60 Hz., Wt. 9.6 lbs.

NOTE: Valves above are shipped without control switch. Use 202777 remote hand switch. When this valve is mounted, the pump must be equipped with an outlet check valve.

3/4-WAY/2-POSITION SOLENOID VALVES



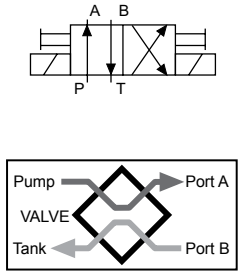

Applications: Single or double-acting cylinders. When used with single-acting cylinders, one port should be plugged.

Actuation: Solenoid-operated, 115VAC, 50/60 Hz.

Functions: Oil is directed to "extend" side of cylinder, oil from "retract" side goes to reservoir; cylinder "holds" with pump shut-off. Oil is directed to "retract" side of cylinder; oil from "extend" side goes to reservoir. **NOTE:** Cylinder will not "hold" in the "return" position with motor running or shut-off.

Used on these pumps: 9552, 9572 and 9592 are used with PE17, PE30 (with carrying handles removed), PE46, PE55, PE400, PQ60 and PQ120 series.

Order No.	Description
9592	3/4-way/2-position solenoid valve, 115VAC, 50/60 Hz., Wt. 14.6 lbs.
9552	3/4-way/2-position solenoid valve, 230VAC, 50/60 Hz., Wt. 14.6 lbs.
9572	3/4-way/2-position solenoid valve, 24VAC, 50/60 Hz., Wt. 14.6 lbs.

NOTE: Valves above are shipped without controls. The 9552, 9572 and 9592 can be used with the 304718 remote hand control.
NOTE: Ports are 1/4" NPTF.

AIR ACTUATED VALVE



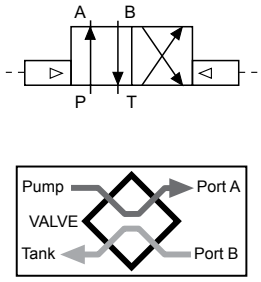

Applications: Single or double-acting cylinders. When used with single-acting cylinders, one port should be plugged.

Actuation: Air-operated.

Functions: Oil is directed to "extend" side of cylinder, oil from "retract" side goes to reservoir, cylinder "holds" with pump shut-off. Oil is directed to "retract" side of cylinder, oil from "extend" side goes to reservoir.
NOTE: Cylinder will not "hold" in the "return" position with motor running or shut-off.

Used on these pumps: PA17, PA46 and PA55 series.

Order No.	Description
9594	3/4-way/2-position solenoid valve, air-operated (minimum of 50 psi air pressure required). Wt., 11 lbs.

NOTE: Valve above is shipped without controls. 9594 can be used with the 209593 remote hand control.

⚠ CAUTION: To prevent sudden, uncontrolled descent of a load as it is being lowered, use a 9596 Load-Lowering Valve or 9720 Counter Balance Valve in conjunction with the directional valve used in your application.
IMPORTANT: Conversion kit 251528 must be used when mounting any of the valves on this page on PA17 or PE17 pumps.
IMPORTANT: When ordering any valve for a PE30 or PG30 series pump, 1/2" longer mounting screws are required. For valves 9569, 9570 and 9579, order four 10856 cap screws. For valves 9552, 9572 and 9592, order four 12001 cap screws.

4-WAY/3-POSITION (OPEN CENTER) SOLENOID VALVE



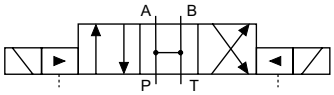

Applications: Double-acting cylinders.

Actuation: Solenoid-operated, 115VAC, 50/60 Hz.

Functions: "Advance," open center and "return" positions. Cylinder ports and pump port are open to reservoir in "neutral."

Used on these pumps: Furnished with pilot lines and adapters for PE30 (with carrying handles removed), PE55 and PE120 series. For other pump models, consult factory.

NOTE: A pressure switch and/or gauge may be attached if desired.

Order No.	Description
9590	4-way/3-position (open center) solenoid valve, 115 volt, 50/60 Hz., Wt. 15.5 lbs.
9522	4-way/3-position (open center) solenoid valve, 230 volt, 50/60 Hz., Wt. 15.5 lbs.
9615	4-way/3-position (open center) solenoid valve, 24 volt, 50/60 Hz., Wt. 15.5 lbs.

4-WAY/3-POSITION (TANDEM CENTER) PILOT-OPERATED SOLENOID VALVE



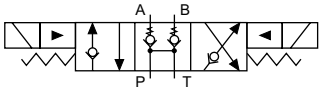



Applications: Double-acting cylinders.

Actuation: Solenoid-operated, 115VAC, 50/60 Hz.

Functions: "Advance," "hold" and "return." The Posi-Check® feature holds the load when shifting from the "advance" to the "hold" position.

Used on these pumps: PE17, PE21, PE30 (with carrying handles removed), PE46, PE55, PE120, PE400, PQ60 and PQ120 series.
NOTE: A gauge may be attached if desired.

Order No.	Description
9513	4-way/3-position (tandem center) solenoid valve, 115VAC, 50/60 Hz., Wt. 18.1 lbs.
9512	4-way/3-position (tandem center) solenoid valve, 24VAC, 50/60 Hz., Wt. 18.1 lbs.
9516	4-way/3-position (tandem center) solenoid valve, 12VDC, Wt. 18.1 lbs. For use on the PG1204S and PG400 series pumps only.
9519	4-way/3-position (tandem center) solenoid valve, 230VAC, 50/60 Hz. , Wt. 18.1 lbs. Consult factory for field installation.

3-WAY/2-POSITION (PILOT-OPERATED, NORMALLY OPEN) SOLENOID VALVE



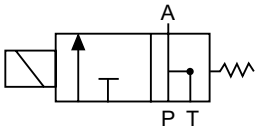

Applications: Single-acting cylinders.

Actuation: Solenoid-operated, 115VAC, 50/60 Hz.

Functions: "Advance" and "return."

Used on these pumps: Furnished with pilot lines and adapters for PE30 (with carrying handles removed), PE55 and PE120 series. For other pump models, consult factory.

NOTE: A pressure switch and/or gauge may be attached if desired.

Order No.	Description
9589	3-way/2-position (pilot-operated) solenoid valve, 115VAC, 50/60 Hz., Wt. 8.2 lbs.
9523	3-way/2-position (pilot-operated) solenoid valve, 230VAC, 50/60 Hz., Wt. 8.2 lbs.
9553	3-way/2-position (pilot-operated) solenoid valve, 24VAC, 50/60 Hz., Wt. 8.2 lbs.

⚠ CAUTION: To prevent sudden, uncontrolled descent of a load as it is being lowered, use a 9596 Load-Lowering Valve or 9720 Counter Balance Valve in conjunction with the directional valve used in your application.
IMPORTANT: Conversion kit 251528 must be used when mounting the 9609 valve on PA17 or PE17 pumps.
IMPORTANT: When ordering any valve for a PE30 or PG30 series pump, 1/2" longer mounting screws are required. For valves 9513 and 9519, order four 11956 cap screws. For valves 9523, 9553 and 9589, order four 10855 cap screws. For valves 9522, 9590 and 9615, order four 10854 cap screws.
NOTE: Valves above are shipped without control switch.

4-WAY/3-POSITION (TANDEM CENTER) MANUAL VALVE



Designed for use with Power Team air, gasoline and electric powered hydraulic pumps.

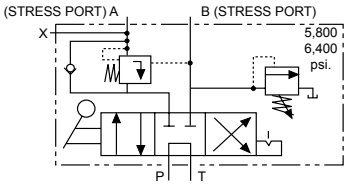

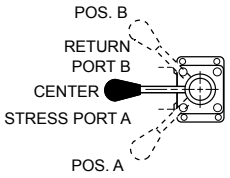

Order No.	Description
9628	Post-tensioning valve for 10,000 psi (max.) single-acting/Power Wedge seater. Wt., 5.4 lbs.

Applications: Single strand, double-acting stressing jacks with Power Wedge seater.

Actuation: Lever-operated, detent-positioned.

Operation:

1. With valve in center position, pump is started.
2. Cable is inserted into stressing tool, valve is placed in "A" position. "Pull" portion of stressing tool is pressurized to specified level for proper cable tensioning ("A" port is checked internally, can only be released by building pressure in "B" position).
3. Valve is placed in "B" position, which is pressure controlled and will not exceed 6,400 psi. "Return" portion of stressing tool is pressurized and will release "A" port when pressure reaches approximately one-half the "A" port pressure. "A" port remains open as long as this pressure differential is maintained.
4. Pump is stopped, valve is placed in "A" position, releasing "B" port pressure.

Used on these pumps: PA17*, PA46*, PA55, PE17*, PE21*, PE30, PE46*, PE55, PE60, PE120, PE400, PG30*, PG55, PG120, PG400, PQ60 and PQ120 series.

* These pumps may have reduced first flow stage characteristics due to internal valve restrictions.

"TWIN" 4-WAY/3-POSITION (TANDEM CENTER) MANUAL VALVE



Pump-mounted, 6-position detented 5-way manual dual valve. Rated pressure to valve "A" is 10,000 psi and valve "B" is 6,000 psi. Case pressure is 500 psi max.

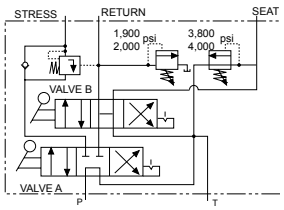

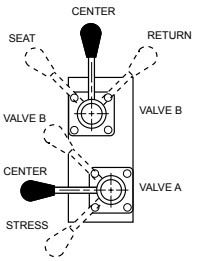

Order No.	Description
9632	Post-tensioning valve for 10,000 psi (max.) double-acting systems. Wt., 13.6 lbs.

Applications: Multi-strand, double-acting stressing jacks with an auxiliary seating cylinder.

Actuation: Dual lever-operated, detent-positioned.

Operation:

1. With valves "A" and "B" in center position, pump is started, and cable is inserted into stressing tool.
2. Valve "A" is placed in "Stress" position and cylinder extends to tension cable. Pump pressure controls force exerted by tensioning cylinder in this position. "Stress" port is checked internally, and can only be released by building pressure in the valve "B" return position.
3. When desired cable tension is achieved, valve "A" is placed in valve "B" position and valve "B" in "Seat" position. Seating portion of cylinder will be pressurized to seating pressure controlled by "Seat" relief valve (factory set to 3,900 psi).
4. Valve "B" is shifted to "Return" position, which is pressure controlled and will not exceed 2,200 psi. "Return" portion of stressing tool should be pressurized and will release "Stress" port when pressure reaches 15% of "Stress" port pressure.
5. "Stress" port will remain open and cylinder will return as long as pressure differential is maintained. "Stress" and "Seat" ports are open to reservoir.
6. When cylinder has fully returned, both valves are shifted to "Center" position and oil will be directed to reservoir. Maximum pressure setting for the "Seat" relief valve is 6,000 psi.

Used on these pumps: PA17*, PA46*, PA55, PE17*, PE21*, PE30, PE46*, PE55, PE120, PE400, PG30*, PG55, PG120, PG400, PQ60 and PQ120 series.*

* These pumps may have reduced first flow stage characteristics due to internal valve restrictions.

⚠ CAUTION: To prevent sudden, uncontrolled descent of a load as it is being lowered, use a 9596 Load-Lowering Valve or 9720 Counter Balance Valve in conjunction with the directional valve used in your application.
IMPORTANT: Conversion kit 251528 must be used when mounting any of the valves on this page on PA17 or PE17 pumps.
IMPORTANT: When ordering any valve for a PE30 or PG30 series pump, 1/2" longer mounting screws are required. For valves 9569, 9570 and 9579, order four 10856 cap screws. For valves 9552, 9572 and 9592, order four 12001 cap screws.

OIL COOLER KITS



Order No.	Description
252511	Oil cooler kit designed for use with PE604T or PE604PT pumps with 115VAC. Wt., 5.0 lbs.
252512	Oil cooler kit designed for use with PE604T or PE604PT pumps with 220VAC. Wt., 5.0 lbs.

FLUID LEVEL/TEMPERATURE GAUGE



Displays fluid level and temperature of hydraulic oil in reservoir.

32°- 212° F, 0°- 100° C.
1.25" wide and 6.38" high.

Order No.	Description
350431	Fluid level/temperature gauge.

RESERVOIR BREATHER KITS



Order No.	Description
206767	Reservoir breather kit designed for use on PA17, PA55, PE17, PE55, PE120, PG55, PG120, PQ60 and PQ120 series pumps. Wt., 1.3 lbs.
250175	Reservoir breather kit designed for use on PE21 and PE46 series pumps. These kits replace the reservoir filler cap when the pump is used in dusty and dirty environments. Wt., 1.3 lbs.

CASTERS



2" diameter casters attach to the bottom of large reservoir for portability.

Sold individually. Order the amount required.

Order No.	Description
10494	Single caster wheel. Wt., 0.3 lb.

FOOT CONTROL GUARD



Order No.	Description
16339	Foot Guard for use with 10461 and 251660 foot controls.

MAGNETIC STRIP



Order No.	Description
207762	Magnetic strip with adhesive back can be added to No. 25017, 202777, 202778 and 304718 hand controls. Provides 6 lbs. of holding force. Wt., 0.1 lb.

VITON™* SEAL KITS



Viton™* seal kits Can be used in all “C” and “RH” series cylinders, as well as the P12, P55, P59, P157/P159, P157D/P159D and P300/P300D series of hand pumps. These seals are required when fire resistant hydraulic fluids are used. Not required with Flame-Out® fluid.

Order No.	Use With	Model
300507	P12	All
300472	P23, P55	All
300510	P59	All
300508	P157, P159, P300	A
300690	P157, P159	B
300696	P300	B
300508	P157D, P159D, P300D	A
300693	P157D, P159D	B
300699	P300D	B

*** Viton™ is an trademarks or registered trademarks of The Chemours Company**

UNIVERSAL PUMP CART



Mobilize your hydraulic pumps with the PC200. The rugged tubular frame can easily handle pumps weighing up to 200 lbs. With 12" wheels, the cart rolls easily. Just load the pump onto the cart and wheel it right to the job. The universal mounting hole pattern lets you handle a wide variety of Power Team pumps.

Cart can be used with the following pumps: PA60, PA64 and PA554 air/hydraulic pumps; PE55 series, PE183-2 and PE184-2 electric/hydraulic pumps; PE21, PQ60 and PQ120 series "Quiet" pumps; PG55 series gas engine/hydraulic pumps; and pumps with optional 5- and 10-gallon reservoirs; Nos. RP50, RP51, RP101 and RP103.
(Pump not included)

Order No.	Description
PC200	Universal pump cart with 12" wheels. Wt., 27 lbs.

PROTECTIVE PUMP ROLL CAGE



Safeguards pump, gas engine and valves on the job site. Horizontal bars provide convenient hand holds for carrying pump, a pick-up point permits lifting unit with an overhead crane or other device. Standard equipment on PG1203 and PG1204. Can be ordered as an option with any other gas, air, or electrically driven hydraulic pump equipped with a 5-gallon reservoir.

NOTE: Refer to PG1203/PG1204 pump for details.

Order No.	Description
PC200RC	Roll cage for use with PC200. (Cannot be used on pumps with 10-gallon reservoirs.) Wt., 36 lbs.
RC2GAL	Roll cage for use with PA46, PA55, PE46, PE55 pumps with 2.5-gallon reservoirs.
RC5	Roll cage for PG55 & PG120. For use with PG120 and PG 55 series pumps. Wt., 19.5 lbs.

LARGE CAPACITY RESERVOIRS

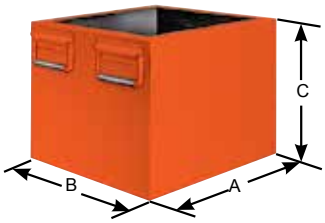

Reservoirs are equipped with drain plugs and all necessary conversion items.

Hydraulic oil is not included with reservoir kits. Please order separately.

Order No.	Cap. (gal.)	Usable Oil (cu. in.)	Use With	Size (in.)		
				A	B	C
RP20**	2.0	442	PA6, PA50 series (models A-E)	11.50	9.50	6.50
RP20-F**	2.0	442	PA6 series (model F), PA50 series (model F & G)††	11.50	9.50	6.50
RP20M*	2.5	450	PA6, PA50 series (models A-E)	11.50	9.50	6.50
RP20M-F*	2.5	450	PA6 series (model F), PA50 series (model F & G)††	11.50	9.50	6.50
RP21*	2.5	450	PE18 series	11.50	9.50	6.50
RP22†	2.5	442	PE55, PE120, PA55	11.50	9.50	6.50
RP50	5.0	1150	PE55, PE120, PA55	18.00	12.50	8.50
RP51	5.0	1150	PA46, PE21, PE46	18.00	12.50	8.50
RP100	10.0	2194	PE55, PE120, PA55	18.00	12.50	14.50
RP101	10.0	2194	PG55, PG120	18.00	12.50	14.50
RP103*	10.0	2310	PQ60, PQ120	15.44	12.50	12.31
RP104	10.0	2194	PA46, PE46, PE21	18.00	12.50	14.00

*** Four mounting holes: 1/2"-20, for 2" diameter swivel casters (No. 10494)**

**** High density polyethylene reservoir.**

† Aluminum reservoir.

††Excluding PA6D and PA50D

METAL RESERVOIR CONVERSION KITS FOR PUMPS (INCLUDES GASKETS AND FASTENERS)

Pump Number	Metal Reservoir Order Number	Metal Reservoir Capacity (cu. in.)	Reservoir Wt. (lbs.)
PA6	213896	105	3.0
PA6A	213896	105	3.0
PA6D	213896	105	3.0
PA6-2	213895	578	9.0
PA6D2	213895	578	9.0

Pump Number	Metal Reservoir Order Number	Metal Reservoir Capacity (cu. in.)	Reservoir Wt. (lbs.)
PA50	213896	105	3.0
PA50R	213896	105	3.0
PA6R	213896	105	3.0
PA50R2	213895	578	9.0
PA172	213895	578	9.0

Pump Number	Metal Reservoir Order Number	Metal Reservoir Capacity (cu. in.)	Reservoir Wt. (lbs.)
PA174	213895	578	9.0
PE172	213895	578	9.0
PE172A	213895	578	9.0
PE172S	213895	578	9.0
PE174	213895	578	9.0

Model Shown:
9593

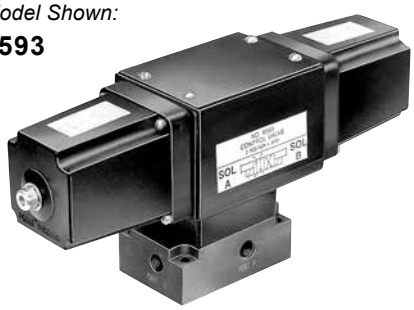

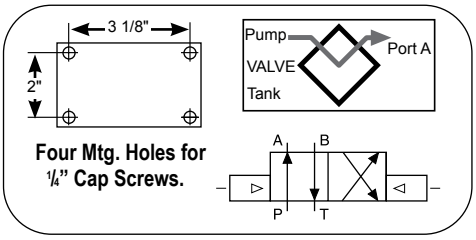

3/4-WAY / 2-POSITION SOLENOID ACTUATED VALVES

Application: Single or double-acting cylinders.

Actuation: 9593, 9524 and 9554 are solenoid-operated

Operation with single-acting cylinder: Either oil port "A" or "B" must be plugged on valve. With port "B" plugged, solenoid is energized to position "A," oil port "A" becomes pressurized. When solenoid is energized to position "B," oil port "A" becomes the return port.

Operation with multiple single-acting cylinders: A pressure line from one bank can be connected to oil port "A" and the other to oil port "B" on the valve. Sequence: When energized to position "A," oil port "A" becomes pressurized and clamps the fixture connected to oil port "A". Oil port "B" becomes a "return" port for cylinder connected to oil port "B," and retracts it. The opposite happens when solenoid "B" is energized.

Operation with double-acting cylinder: Port "A" is connected to "advance" port of cylinder, oil port "B" connects to cylinder "return" port. Solenoid is energized to position "A," oil port "A" becomes pressurized to extend cylinder piston. The opposite happens when solenoid "B" is energized. Valve does not hold in "retract" position.

NOTE: When using more than one valve on a pump, the tank port may require a check valve to permit inadvertent, momentary extension of a retracted cylinder.

NOTE: If pump is equipped with an internal outlet check, a "hold" position can be maintained with the pump shut-off.

Order No.	Description
9593	3/4-way 2-position, remote-mounted solenoid valve, 115VAC, 50/60 Hz., Prod. Wt. 15.4 lbs.
9524	3/4-way 2-position, remote-mounted solenoid valve, 230VAC, 50/60 Hz., Wt. 15.4 lbs.
9554	3/4-way 2-position, remote-mounted solenoid valve, 24VAC, 50/60 Hz., Wt. 15.4 lbs.

Model Shown:
9595



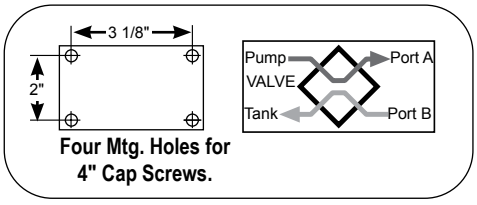

3/4-WAY / 2-POSITION AIR ACTUATED VALVES

Application: Single or double-acting cylinders.

Actuation: 9595 is air-operated.

Operation with single-acting cylinder: Either oil port "A" or "B" must be plugged on valve. With port "B" plugged, solenoid is energized to position "A," oil port "A" becomes pressurized. When solenoid is energized to position "B," oil port "A" becomes the return port.

Operation with multiple single-acting cylinders: A pressure line from one bank can be connected to oil port "A" and the other to oil port "B" on the valve. Sequence: When energized to position "A," oil port "A" becomes pressurized and clamps the fixture connected to oil port "A". Oil port "B" becomes a "return" port for cylinder connected to oil port "B," and retracts it. The opposite happens when solenoid "B" is energized.

Operation with double-acting cylinder: Port "A" is connected to "advance" port of cylinder, oil port "B" connects to cylinder "return" port. Solenoid is energized to position "A," oil port "A" becomes pressurized to extend cylinder piston. The opposite happens when solenoid "B" is energized. Valve does not hold in "retract" position.

NOTE: When using more than one valve on a pump, the tank port may require a check valve to permit inadvertent, momentary extension of a retracted cylinder.

NOTE: If pump is equipped with an internal outlet check, a "hold" position can be maintained with the pump shut-off.

Order No.	Description
9595	3/4-way 2-position, remote-mounted air-operated solenoid valve (minimum of 50 psi air pressure required), Prod. Wt. 11.4 lbs.

⚠ CAUTION: To prevent sudden, uncontrolled descent of a load as it is being lowered, use a 9596 Load-Lowering Valve or 9720 Counter Balance Valve in conjunction with the directional valve used in your application.

⚠ CAUTION: The Posi-Check® feature will not hold the load when shifted directly A to B-B to A or from hold to A or B.

NOTE: Maximum tank line pressure for remote-mounted valves is 500 psi.

Model Shown:
9508



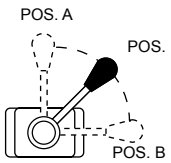

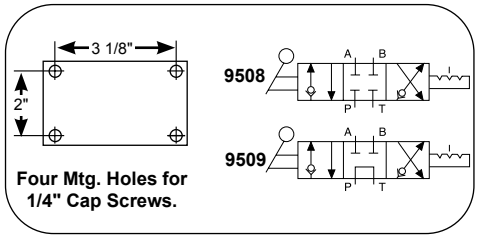

4-WAY / 3-POSITION (CLOSED CENTER) AND (TANDEM CENTER) MANUAL VALVES WITH POSI-CHECK®

Application: Single or double-acting cylinders. When used with single-acting cylinders, one port must be plugged. For double-acting cylinders, either port can be used to “advance” or “return.”

Actuation: Lever-operated, detent-positioned.

Functions: The 9508 provides “advance,” “hold” and “return” positions with all ports blocked (closed center) in the “hold” position. The 9509 has “advance,” “hold” and “return” with tandem center (cylinder ports are blocked, pump remains running). Both valves have Posi-Check® feature to guard against pressure loss when shifting from “advance” to “hold.”

Order No.	Description
9508	4-way 3-position (closed center) manual valve, including sub-plate for remote mounting. Wt., 6.3 lbs.
9509	4-way 3-position (tandem center) manual valve, including sub-plate for remote mounting. Wt., 6.3 lbs.



Model Shown:
9526



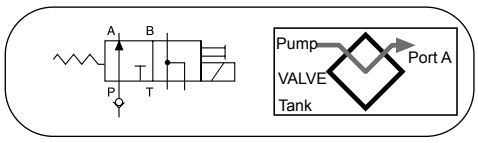

3-WAY / 2-POSITION SOLENOID VALVE

Application: Single-acting cylinders.

Actuation: Solenoid-operated, 115/230/24VAC, 50/60 Hz.

Function: Advances cylinder piston when solenoid is de-energized, and pump is running. When solenoid is energized, oil is directed back through valve “return” port and cylinder piston returns. To place cylinder in “hold” position, pump must be stopped or its flow held at the valve “pressure” port with the solenoid de-energized.

NOTE: Valve is equipped with a 9631 snubber valve in port “A.” The line from the “return” port of the valve must be unrestricted (100 psi back pressure maximum) back to the reservoir.

IMPORTANT: A 9580 in-line check valve must be installed in the “pressure” port if the supply pump is not equipped with an outlet check valve.

NOTE: Valves above are shipped without control switch. Use 202777 remote hand switch.

Order No.	Description
9559	3-way 2-position solenoid valve, 115VAC 50/60 Hz. Includes a remote mounting sub-plate. Wt., 9.7 lbs.
9526	3-way 2-position solenoid valve, 230VAC 50/60 Hz. Includes a remote mounting sub-plate. Wt., 9.7 lbs.
9556	3-way 2-position solenoid valve, 24VAC 50/60 Hz. Includes a remote mounting sub-plate. Wt., 9.7 lbs.

Model Shown:
9514



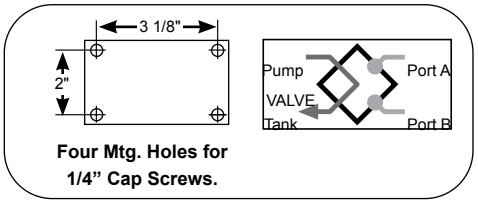

4-WAY / 3-POSITION (TANDEM CENTER) SOLENOID VALVE WITH POSI-CHECK®

Application: Double-acting cylinders.

Actuation: Solenoid-operated, 115/230/24VAC, 50/60 Hz.

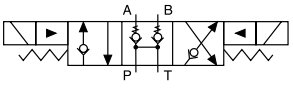

Functions: Push button control of “advance,” “hold” and “return.” The Posi-Check® feature guards against pressure loss when shifting from “advance” to “hold.” With valve in “hold” position, cylinder ports are blocked and oil is directed from pump to reservoir.

NOTE: Do not allow return tank pressure to exceed 500 psi at the valve, Consult factory before installing a pressure switch on any of these valves.

Order No.	Description
9514	4-way 3-position (tandem center) solenoid valve, 115VAC, 50/60 Hz. Remote hand control included. Wt., 10.1 lbs.
9525	4-way 3-position (tandem center) solenoid valve, 230VAC, 50/60 Hz. Remote hand control included. Wt., 10.1 lbs.
9555	4-way 3-position (tandem center) solenoid valve, 24VAC, 50/60 Hz. Remote hand control included. Wt., 10.1 lbs.

LOAD-LOWERING VALVE



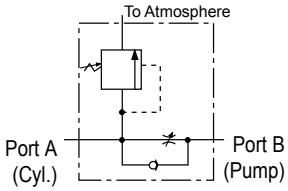

Application: Precision metering for controlled cylinder piston return.

Operation: Permits free flow when extending cylinder, built-in pressure relief and Posi-Check® locks and holds load in raised position until operator opens valve. May be pre-set to provide consistent metered return, or operator may select rate of return with each actuation. Has 3/8" NPTF ports.

NOTE: Pressure relief valve setting is 12,000 psi. Operating pressure is 10,000 psi and max. flow rate is 5 gpm.

Order No.	Description
9596	Load-lowering valve. Wt., 2.1 lbs.

SEQUENCE VALVE

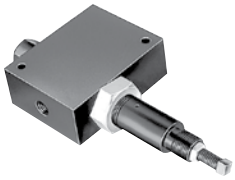

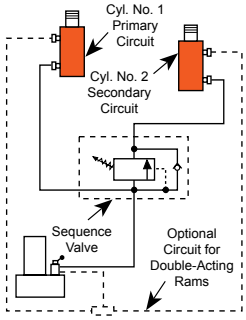

Application: Used when one cylinder in a multi-cylinder application must advance before any other.

Operation: Pump is connected to port "P" and separate cylinders to ports "A" and "B." When pressure is applied to port "P," cylinder "A" advances. Cylinder "B" will not advance until a predetermined pressure setting is reached in cylinder "A." Pressure setting is adjustable from 500 to 8,000 psi with adjustment screw (factory preset at 1,000 psi). Has 3/8" NPTF ports.

Order No.	Description
9597	Pressure control sequencing valve. Wt., 5.6 lbs.

PRESSURE REDUCING VALVE



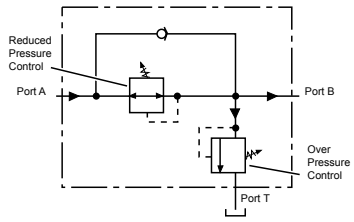

Application: Provides complete, independent pressure control to two or more clamping systems operated by a single power source.

Operation: Can be used to provide different pressures in various stages of a single system. Virtually zero leakage across valve means each system can be operated by a single continuous pressure source. Adjustable from 1,000 to 5,000 psi at outlet port "B" (secondary). Has 1/4" NPTF ports.

Order No.	Description
9608	Pressure reducing valve. Wt., 5.8 lbs.

⚠ **CAUTION:** Over Pressure control must be set at a higher value than operating pressure.

COUNTER BALANCE VALVE



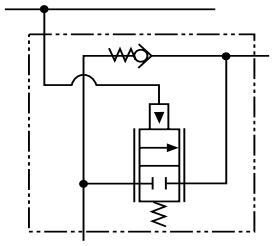

Application: Double-acting cylinders. Provides positive holding and controlled, "chatter-free" lowering of a load.

Operation: Load is raised at flow rate of pump, and held when pump is shut-off. When the pump is shifted to "retract," the counter balance valve will continue to hold the load until system pressure exceeds pressure caused by load. The load can then be lowered smoothly to the flow rate of the pump. The counter balance valve is designed to operate with pumps having a high pressure flow rate of up to 120 cu. in./min. and cylinder ratios of 3 to 1.

Order No.	Description
9720	Counter balance valve, including two pairs of fittings (male and female), hydraulic hoses, and dust caps. Wt., 10.0 lbs.
9721	Counter balance valve, including two pairs of fittings (male and female), but does not include couplers, hoses, fittings and dust caps. Wt., 9.2 lbs.

⚠ **CAUTION: The 9720 patented counter balance valve has a pilot pressure as high as 3,000 psi. Because this pressure is applied to the rod end of the cylinder while it is already under load, the system should not be sized for loads greater than 80% of cylinder rated capacity. To prevent sudden, uncontrolled descent of a load as it is being lowered, use a 9596 Load-Lowering Valve or 9720 Counter Balance Valve in conjunction with the directional valve used in your application.**

METERING VALVE



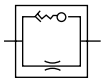

Application: For systems using large cylinders or extended lengths of hydraulic hose.

Operation: Controls surges by restricting flow if it exceeds 7 gpm. When flow subsides, valve reopens automatically. Has 3/8" NPTF male end to thread into return port of system control valve, and a 3/8" NPTF female end, permitting return hose to be directly connected.

Order No.	Description
9631	Metering valve. Wt., 0.2 lb.

"IN-LINE" PRESSURE REGULATOR VALVE



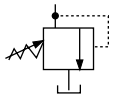

Application: Single or double-acting cylinders. Permits adjusting operating pressures at various values below relief valve setting of pump.

Operation: Regulator valve is easily adjusted to maintain pressures between 300 and 10,000 psi. Maintains a given pressure setting within 3% over repeated cycles. Flow range is 17 cu. in./minute to 6 gpm.

Order No.	Description
9633	In-line pressure regulator valve with two 3/8" NPTF inlet ports, one 1/8" NPTF tank port and 3 foot drain line kit. Wt., 1.9 lbs.

RELIEF VALVE



Application: Provide an economical means of protecting a hydraulic circuit against over pressurization.

Operation: These factory preset valves are designed for maximum flow rate of 5 gpm. Furnished with 1/8" NPTF male port. All valves weigh 0.2 lb. See chart below for ordering information.

NOTE: Care should be exercised to protect workers from hot, pressurized hydraulic oil. Install these valves only in an enclosed or shielded area.

Typical Set-Up

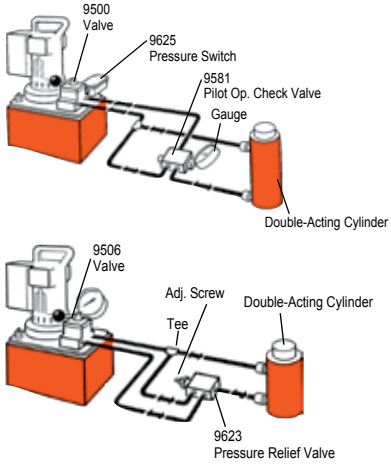

Relief Valve Order No.	Pressure Setting* (psi)
RV21278	10,100 / 10,700
RV21278-6	600 / 640
RV21278-10	900 / 1,000
RV21278-15	1,500 / 1,700
RV21278-17	1,600 / 1,800
RV21278-20	1,900 / 2,200
RV21278-25	2,300 / 2,700
RV21278-27	2,600 / 2,800
RV21278-28	2,700 / 3,000
RV21278-30	3,000 / 3,400
RV21278-32	3,100 / 3,300
RV21278-35	3,500 / 3,800
RV21278-38	3,750 / 3,950
RV21278-40	4,100 / 4,500
RV21278-43	4,400 / 4,800
RV21278-48	4,900 / 5,300

Relief Valve Order No.	Pressure Setting* (psi)
RV21278-50	5,100 / 5,700
RV21278-52	5,300 / 5,900
RV21278-55	5,600 / 6,200
RV21278-57	5,800 / 6,400
RV21278-60	6,100 / 6,700
RV21278-65	6,600 / 7,200
RV21278-70	7,100 / 7,700
RV21278-75	7,600 / 8,200
RV21278-80	8,100 / 8,700
RV21278-83	8,400 / 9,000
RV21278-86	8,700 / 9,300
RV21278-88	8,900 / 9,600
RV21278-90	9,100 / 9,700
RV21278-114	11,500 / 12,100
RV21278-6280	6,380 / 6,900
*All RV's are Preset - Non-Serviceable	

SHUT-OFF VALVE



Application: This needle valve permits fine metering of hydraulic oil.

Operation: Can be used for controlling multiple single-acting cylinders.

Order No.	Description
9575	Shut off valve with 3/8" NPTF ports. Wt., 1.4 lbs.

CHECK VALVE





Application: Permits flow of hydraulic oil in one direction only.

Operation: Installs right in hydraulic line.

Order No.	Description
9580	Check valve with 3/8" NPTF male ends. Wt., 0.4 lb.

PILOT-OPERATED CHECK VALVE



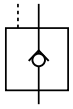

Application: For use with open or tandem center valves. Permits free flow of fluid in one direction.

Operation: Flow is blocked in opposite direction until pilot oil pressure is applied. This prevents the loss of pressure if the valve is inadvertently shifted or the pump line is broken. Minimum cracking pressure is 60 psi. Required pilot pressure is approximately 16% of checked system pressure.

Order No.	Description
9581	Pilot-operated check valve with 3/8" NPTF ports. Wt., 3.8 lbs.

"IN-LINE" PRESSURE RELIEF VALVE



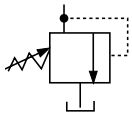

Application: Single or double-acting cylinders. For remote locations in a hydraulic circuit where maximum pressure requirements are less than basic overload valve setting in pump.

Operation: Adjustable from 1,000 to 10,000 psi. Valve is spring-loaded and direct-acting.

Order No.	Description
9623	Pressure relief valve with 3/8"NPTF ports. Wt., 2.0 lbs.

Model Shown:
9639, 9638



Performance Requirements

For additional technical information or to order a **Material Safety Data Sheet** call **1-800-477-8326** or go to **www.powerteam.com**.

Features

STANDARD HYDRAULIC OIL

- For dependable performance of all your hydraulic pumps and cylinders.
- Contains foam suppressant additives and has a high viscosity index.

FLAME-OUT® 220 FIRE RESISTANT HYDRAULIC FLUID*

- Contains anti-rust, anti-foam and anti-sludge additives.
- Provides fire resistant protection. Note: Will burn if heat source is extreme enough. Will not, however, propagate the flame and is self-extinguishing when there is no ignition source.
- Provides maximum lubrication and heat transfer.
- Offers a wider operating temperature range.
- No need to change seals in your Power Team equipment. Just drain the standard oil and replace it with Flame-Out® 220.

BIODEGRADABLE HYDRAULIC FLUID

- Biodegradable, non-toxic fluid withstands moderate to severe operating conditions. Provides excellent protection against rust.
- Offers superior anti-wear properties and has excellent multi-metal compatibility.

LOW TEMPERATURE OIL

- Provides smooth, reliable operation in the coldest climate conditions.

Technical Specifications

Description	Grade (ASTM)	Specific Gravity @ 60°F	Color (ASTM)	Flash Point (in.)	Fire Point (in.)	Pour Point (in.)	Viscosity SUS @ 100°F (psi.)	Viscosity SUS @ 210°F (psi.)	Viscosity Index	Foam Test (ASTM)
Standard Oil	215	0.88	Blue	400°F	430°F	-30°F	215	48	100 min.	Pass
Flame-Out®	220	0.91	Light Amber	500°F	550°F	-15°F	220	55	140 min.	Pass
Biodegradable	—	0.92	2 Amber	320°F	Not available	-11°F	183	53	213 min.	Pass
Low Temp.	—	0.87	6.5 Red	356°F	399°F	-48°F	183	52	190 min.	Pass

Note: Shelf Life: Up to 5 years if container is unopened.

Ordering Information

Order Number	Oil Description	Quantity
9636	Standard Oil	1 quart
9637		1 gallon
9638		2.5 gallons
9616		55 gallons
9639	Flame-Out®	1 gallon
9640		2.5 gallons
9645	Biodegradable	1 gallon
9646		2.5 gallons
9647	Low Temperature	1 gallon

ON/OFF MOTOR CONTROL



25017



203225



10461



251660

The following remote control switches will give you momentary "ON" control of your hydraulic pump. These switches are deadman type, spring loaded to the "OFF" position. They can be used with any Power Team electric hydraulic pump.

Order No.	Description
25017	Remote hand control. Has a push button switch, with a 10 foot cord. Wt., 0.8 lb.
203225	Remote hand control. Heavy-duty with single push button switch in a neoprene housing with 10 foot cord. Housing seals out dust, lint and liquids (unit is not submersible). Wt., 0.8 lb.
HDT10461	Remote foot control, with 10 foot cord. Wt., 3.0 lbs.
251660	Remote foot control, with 10 foot cord. For use with the PE10 style pumps. Wt., 1.0 lb.

SOLENOID & MOTOR CONTROL



202777
202778
304718



309652
309653



209593

17627
216209



Order No.	Description
202777 *	Remote hand control. Has rocker style switch that is momentary advance, spring center hold and detented retract. It comes with a 10 foot cord, for use with 3-way/2 or 3-position valves. Wt., 0.9 lb.
202778 **	Remote hand control. Has rocker style switch that is momentary advance, spring center hold and momentary retract. It comes with a 10 foot cord, for use with 4-way/3-position valves. Wt., 0.9 lb.
304718**	Remote hand control. Has a rocker style switch that is momentary advance, spring center hold and momentary retract. The switch is wired to start and stop the motor when the valve is energized. It comes with a 10 foot cord. To be used with 4-way/2-position valves. Wt., 0.9 lb.
309653	Remote foot control. Can be used in place of either of the above hand controls to control the same type of valves. The switch is momentary on, both advance and retract position, and is spring centered to the hold position. This foot switch comes with 10 foot cord. Wt., 4.0 lbs.
17627	Remote foot control. Same as the 309653, but without a cord. Wt., 2.0 lbs.
309652	Remote foot control. Has same functions as 304718. Supplied with a 10 foot cord. To be used with 4-way/2-position valves. Wt., 4.0 lbs.
216209	Remote foot control. Same as the 309652, but without a cord. Wt., 2.0 lbs.

* For use on solenoid valves that are used on single-acting cylinders
** For use on solenoid valves that are used on double-acting cylinders

NOTE: See valves listing to determine which remote to use.

REMOTE AIR MOTOR CONTROLS



209593

This remote hand control has two momentary push buttons, one for advance and one for retract with spring offset to hold.
To be used with 4-way/2-position air pilot valves.

Order No.	Description
209593	Remote hand control with 12 foot cord. Wt., 2 lbs.

SUB-PLATES



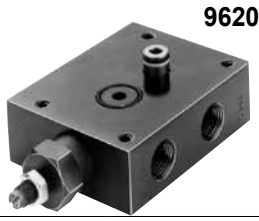

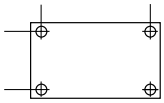

9510 and 9620 attach to the bottom of valve for remote mounting.

For remote mounting of control valves. Sub-plates convert pump-mounted valves to remote-mounted valves quickly and easily.

Order No.	Description
9510	Sub-plate for remote mounting the following valves; 9500, 9501, 9502, 9504, 9506, 9507, 9511, 9552, 9572, 9575, 9576, 9592 and 9594. Wt., 1.5 lbs.
9620	For use with 9500, 9501, 9502, 9552, 9572, 9592 and 9594. Same as 9510, but has integral pressure regulating valve. Wt., 3.8 lbs.

PUMP-MOUNTED SUB-PLATES



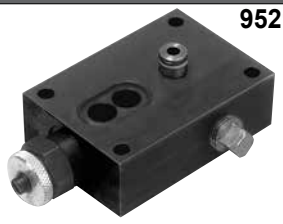

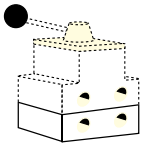

The 9515 and 9521 mount between the pump cover plate and valve.

When fitted between pump cover plate, valve mounting flange, and control valve, provides a separate 3/8" NPTF female port, open to "return" regardless of position of valve. Also provides a separate 3/8" NPTF female pressure port. This sub-plate can be useful when you desire to use one pump with a deck-mounted control valve, plus a separate remote-mounted valve to control another function.

For use with the following valves: 9500, 9501, 9502, 9504, 9506, 9507, 9511, 9520, 9552, 9572, 9575, 9576, 9592, 9594, and 9609.

Order No.	Description
9515	Sub-plate, Wt., 1.3 lbs.
9521	Sub-plate for use under most pump-mounted valves to provide adjustable pressure control on units not equipped with an external pressure regulator. Wt., 3.8 lbs.

AIR FILTER/REGULATOR/LUBRICATOR

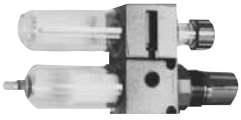

Recommended for use with single-speed air/hydraulic pumps.

Order No.	Description
9531	Filter/regulator. 1/4" NPTF inlet and outlet. Wt., 0.8 lb.

PRESSURE SWITCH



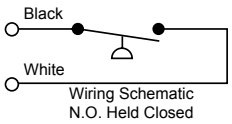

Wiring Schematic
N.O. Held Closed

Application: Used in a hydraulic circuit where system pressure must be "held." Automatically (electrically) turns off pump motor when predetermined system pressure is reached.

Attaches directly to control valve manifold or can be mounted in-line to read system pressure. Has a 1/4" NPTF male thread, and a 1/4" NPTF fitting for gauge mounting if required. Adjustable from 1,000 to 10,000 psi. Can also be used to actuate other electrical devices in the system. Wired normally open and held closed by spring pressure.

Order No.	Description
9625	In-line pressure switch with 1/4" NPTF gauge port. Wt., 1.1 lbs.

IMPORTANT: Electrical rating of switch is 5 amps at 250VAC max. To prevent permanent damage to switch, a control relay must be installed to handle currents or voltage exceeding these limits. Pressure switch should never be used to directly actuate the electrical motor.

PILOT-OPERATED AIR CONTROL VALVES



Application: For use when an air pilot signal is required at a set hydraulic pressure. Can be used to shift valves, and start or stop pneumatic pumps.

Attaches directly to control manifold or can be mounted in-line to read system hydraulic pressure. Automatically turns on an air pilot signal when a predetermined system pressure is reached. Has 1/4" NPTF male thread and 1/4" NPTF fitting for gauge mounting if required. Adjustable from 500-10,000 psi. Maximum rating of 25 scfm at 100 psi.

Order No.	Description
9641	Pilot-operated control valve, normally closed, with 1/4" NPTF male thread. Wt., 1.0 lb.
9643	Pilot-operated control valve, normally open, with 1/4" NPTF male thread. Wt., 1.0 lb.

Model Shown:
9755



Features

REINFORCED WIRE-BRAID RUBBER HOSES OFFER INCREASED DURABILITY

- 2-ply rated hose reinforced with two braids of high tensile steel wire.
- The rubber covering is oil and weather resistant.
- Hoses are equipped with spring guards.
- 3/8" NPTF fittings on both ends.
- Operating pressure is 10,000 psi.
- These hoses are MSHA approved.

Cylinder Return Time

Cylinder No.	9769 10 Ft. Hose 1/4" I.D.	9781 10 Ft. Hose 3/8" I.D.
C2514C	51 sec.	14 sec.
C556C	1 min., 30 sec.	24 sec.
C5513C	4 min., 12 sec.	59 sec.
C10010C	6 min., 56 sec.	1 min. 3 sec.

Hose with Coupler Half



9754 hose coupler with 9798 hose half coupler and 9800 dust cap.

Ordering Information

Hose Type	Hose I.D.	Hose Length (ft.)	Burst Rating (psi.)	Order Number
Rubber, Wire-Braid	1/4"	3	20,000	9755
Rubber, Wire-Braid	1/4"	6	20,000	9756
Rubber, Wire-Braid	1/4"	6	20,000	9754**
Rubber, Wire-Braid	1/4"	8	20,000	9757
Rubber, Wire-Braid	1/4"	10	20,000	9758
Rubber, Wire-Braid	1/4"	12	20,000	9759
Rubber, Wire-Braid	1/4"	20	20,000	9760
Rubber, Wire-Braid	1/4"	30	20,000	9761
Rubber, Wire-Braid	1/4"	50	20,000	9762

**Furnished with 9798 hose half coupler and 9800 dust cap.

Hose Type	Hose I.D.	Hose Length (ft.)	Burst Rating (psi.)	Order Number
Rubber, Wire-Braid*	3/8"	3	20,000	9733
Rubber, Wire-Braid*	3/8"	6	20,000	9776
Rubber, Wire-Braid*	3/8"	10	20,000	9777
Rubber, Wire-Braid*	3/8"	15	20,000	9734
Rubber, Wire-Braid*	3/8"	20	20,000	9778
Rubber, Wire-Braid*	3/8"	30	20,000	9735
Rubber, Wire-Braid*	3/8"	40	20,000	9736
Rubber, Wire-Braid*	3/8"	50	20,000	9779

* High Flow

Model Shown:
9767



Features

POLYURETHANE HOSES OFFER HIGHER BURST PRESSURE RATINGS OVER BRAIDED RUBBER.

- Nylon core tube with polyester fiber reinforcement.
- Hoses are equipped with plastic hose guards (except for the 1/4" I.D. polyurethane hoses which have spring guards).
- Withstands the minimum SAE bend radius without shortening service life.
- These hoses last up to seven times longer than rubber hose.
- Suitable for continuous service at temperatures from -40° to 150° F.

BE SAFE!

1. Inspect before and after each use.
2. Replace if any signs of degradation or wear that may affect safety or performance.
3. Keep the product clean.
4. Store properly.

Cylinder Return Time

Cylinder No.	9769 10 Ft. Hose 1/4" I.D.	9781 10 Ft. Hose 3/8" I.D.
C2514C	51 sec.	14 sec.
C556C	1 min., 30 sec.	24 sec.
C5513C	4 min., 12 sec.	59 sec.
C10010C	6 min., 56 sec.	1 min. 3 sec.

Ordering Information

Hose Type	Hose I.D.	Hose Length (ft.)	Burst Rating (psi.)	Order Number
Polyurethane	1/4"	2	20,000	9765
Polyurethane	1/4"	3	20,000	9766
Polyurethane	1/4"	6	20,000	9767
Polyurethane	1/4"	6	20,000	9764**
Polyurethane	1/4"	8	20,000	9768
Polyurethane	1/4"	10	20,000	9769
Polyurethane	1/4"	12	20,000	9770
Polyurethane	1/4"	20	20,000	9771
Polyurethane	1/4"	50	20,000	9772
Polyurethane	1/4"	75	20,000	9750
Polyurethane	1/4"	100	20,000	9751

**Furnished with 9798 hose half coupler and 9800 dust cap.

Hose Type	Hose I.D.	Hose Length (ft.)	Burst Rating (psi.)	Order Number
Polyurethane*	3/8"	6	30,000	9780
Polyurethane*	3/8"	6	30,000	9780
Polyurethane*	3/8"	10	30,000	9781
Polyurethane*	3/8"	20	30,000	9782
Polyurethane*	3/8"	50	30,000	9783

* High Flow

Model Shown:
9774



Features

NON-CONDUCTIVE HOSE

- For applications requiring electrical isolation.
- 3/8" NPTF fittings on both ends
- Leakage factor of less than 50 micro-ampere.
- Orange polyurethane for easy identification.
- Covering is not perforated, preventing moisture from entering the hose and affecting its overall conductivity.
- Hoses feature a minimum 40,000 psi burst pressure.

BE SAFE!

- Inspect before and after each use.
- Replace if any signs of degradation or wear that may affect safety or performance.
- Keep the product clean.
- Store properly.

Torque Wrench Hoses - Non-Conductive Dual Line



Order Number	Hose Length (ft.)	Hose I.D. (in.)
TWH15	15	1/4"
TWH20	20	1/4"
TWH30	50	1/4"

For torque wrench tools, refer to the tool section.

Ordering Information

Order Number	Couplers / Fitting	Hose I.D. (in.)	Hose Length (ft.)	Burst Rating (psi.)
9773	3/8" Fitting NPTF	1/4"	6	40,000
9774	3/8" Fitting NPTF	1/4"	10	40,000
9775	3/8" Fitting NPTF	1/4"	20	40,000
2000351	3/8" Fitting NPTF	1/4"	15	40,000
2000350	3/8" Fitting NPTF	1/4"	25	40,000
3-3944*	Male / Male Couplers †	1/4"	6	40,000
3-3945*	Male / Male Couplers †	1/4"	10	40,000
3-3946*	Male / Male Couplers †	1/4"	15	40,000
3-3947*	Male / Male Couplers †	1/4"	25	40,000
3-3956*	Male / Female Couplers †	1/4"	6	40,000
3-3957*	Male / Female Couplers †	1/4"	10	40,000
3-3958*	Male / Female Couplers †	1/4"	15	40,000
3-3959*	Male / Female Couplers †	1/4"	25	40,000

* Hoses are prefilled with hydraulic fluid.

† Dust caps are included with coupler.

CYLINDER AND HOSE COUPLERS are designed for use up to 10,000 psi with hydraulic jacks, cylinders, etc. They are the threaded union type for interchanging cylinders in seconds. Each half is valved with a precision ball for a tight shutoff when disconnected. These couplers also permit the separation of cylinders or hose from pump when at 0 psi with minimal oil loss.

NO SPILL, PUSH TO CONNECT COUPLERS are designed to permit high oil flow, the no-spill, push-to-connect couplers with locking collar and flush face design are for high pressure applications. The flush-face concept makes it easy to clean both coupler ends before connecting. Our unique push-to-connect, "dry-break" design eliminates oil spillage. The locking collar makes accidental disconnects a thing of the past. For 10,000 psi operation.

	Order No.	Description
	9795	Complete quick coupler with two 9800 dust caps, 3/8" NPTF.
	9798	Male (hose) half coupler 3/8" NPTF.
	9796	Female (cylinder) half coupler with 9800 dust cap, 3/8" NPTF.
	9796-V*	Female (cylinder) half coupler with Viton™ seals and 9797 metal dust cap, 3/8" NPTF.
	9796-E	Female (cylinder) half coupler with EPR seals and No. 9797 metal dust cap, 3/8" NPTF.
	9799	Optional metal dust cap (hose half).
	9797	Optional metal dust cap for cylinder half.
	9800	Dust cap for male or female 3/8" NPTF half couplers. (Wt., 0.3 lb.)

	Order No.	Description
	251410	Quick-connect, screw-on female coupling. Used on 700 bar torque wrenches, nut-splitters, hoses, and pumps. 1/4" NPT Male Thread
	251411	Quick-connect, screw-on male nipple. Used on 700 bar torque wrenches, nut-splitters, hoses, and pumps. 1/4" NPT Female Thread
	252364	Metal dust cover for female coupler
	252365	Metal dust cover for male coupler
	9792	No-spill, push-to-connect, Female (cylinder) half quick coupler only. (Wt., 0.3 lb.)
	9793	No-spill, push-to-connect ,Male (hose) half quick coupler only. (Wt., 0.3 lb.)
	9794	No-spill, push-to-connect, Complete quick coupler (male and female). Dust caps not included. (Wt., 0.5 lb.)

*** Viton™ is an trademarks or registered trademarks of The Chemours Company**

Accessories

Model Shown:
9040, 9052, 9089



Features

HEAVY-DUTY HYDRAULIC PRESSURE GAUGES

- Gauges feature an easily readable and highly visible, red Day-glo® needle.
- High strength steel bourdon tube ensures high cycle life.
- Stainless steel cases and lens locking rings.
- Have 1/4" NPT connections.
- Gauges are calibrated and comply to ASME B40.1 GRADE B

Typical Set-Up - Mounting Situations

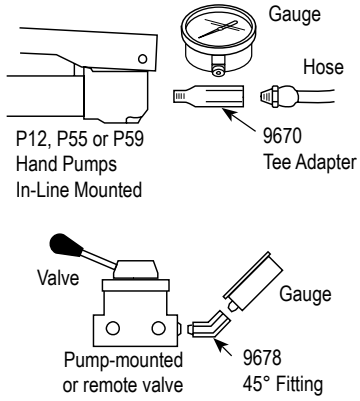

Gauge Adapter Assembly

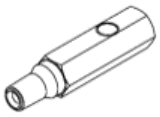

9670XL Extended Tee Adapter

For use when gauges need better viewing when placed between the between pump and hose coupling.

Ordering Information

Order Number	Face Dia. (in.)	Pressure Range (psi.)	Tonnage Range (ton)	Major Graduations (psi.)	Minor Graduations (psi.)	Silicone Filled (Yes/No)	Use With Cylinder Series (ft.)
9040	2.5	0-10,000	–	2500 psi	500 psi	Yes	All
9041	2.5	0-10,000	–	2500 psi	500 psi	No	All
9051	4.0	0-10,000	–	1000 psi	200 psi	No*	All
9052	4.0	0-10,000	–	1000 psi	200 psi	Yes	All
9059	4.0	0-10,000	0-17.5, 0-30, 0-50	2000 psi, 5 Ton	200 psi, .5 Ton on 30, 50 Ton Scales; .2 Ton on 17.5 Ton Scale	No*	RT172, RT302, RT503
9053	4.0	0-10,000	0-5	2000 psi, 1 Ton	200 psi, .1 Ton	No	C & RLS
9055	4.0	0-10,000	0-10	2000 psi, 1 Ton	200 psi, .1 Ton	No*	C, RD, RH, RLS & RSS
9063	4.0	0-10,000	0-25	2000 psi, 5 Ton	200 psi, .5 Ton	No*	C & RD
9065	4.0	0-10,000	0-30	2000 psi, 5 Ton	200 psi, .5 Ton	No*	RH†, RLS & RSS
9067	4.0	0-10,000	0-50	2000 psi, 5 Ton	200 psi, .5 Ton	No*	RH†, RLS & RSS
9069	4.0	0-10,000	0-55	2000 psi, 5 Ton	200 psi, .5 Ton	No*	C, R, RA & RD
9071	4.0	0-10,000	0-60	2000 psi, 5 Ton	200 psi, 1 Ton	No*	RH, except RH6010
9075	4.0	0-10,000	0-100	2000 psi, 10 Ton	200 psi, 1 Ton	No*	C, R, RA, RD, RH, RLS†, RSS† & RT1004†
9077	4.0	0-10,000	0-150	2000 psi, Initial 10 Then 20 Ton	200 psi, 2 Ton	No*	C, R, RD & RLS
9079	4.0	0-10,000	0-200	2000 psi, 20 Ton 10 Then 20 Ton	200 psi, 2 Ton	No*	R, RD & RH†
9089	6.0	0-10,000	0-690	1000 psi	100 psi	No*	All

* Shipped "dry." User can convert to "wet" using liquid silicone No. 9046.

† The tonnage scale on the gauge may vary slightly among different series cylinders due to different effective area.

Model Shown:

LM4 Series



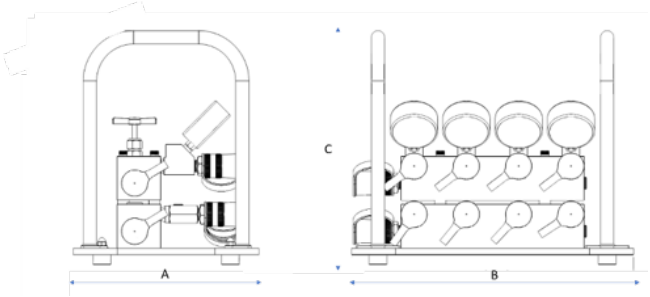

Features

- The control modules are designed to be easily portable, making it suitable for various work environments.
- Equipped with female couplers on all ports, allowing it to be quickly connected to up to four hydraulic cylinders.
- Includes four silicone-filled gauges, each capable of measuring pressures up to 10,000 psi (700 bar).
- The presence of the gauges allows operators to work safely by keeping track of the hydraulic pressure within the system.
- The module is protected by a robust roll cage, which adds an extra layer of durability and protection.

45° Gauge Adapter



9040GA
The Power Team 9040GA gauge adapters are ideal for monitoring and controlling loads. The 45° angle of the 9040GA provides easy viewing of the 2.5” (63.5 mm) gauge.

The LM4 Series is ideal for simple lifting projects where safety and portability are required.



Ordering Information

Order Number	Description	Length (A)	Width (B)	Height (C)	Weight	Max. Operating Pressure
LM4S	Lifting Manifold, 4 Port, Single Acting	10.65 in / 27.05 cm	16.15 in / 41.02 cm	13.38 in / 33.97 cm	34 lb / 15.4 kg	10,000 psi (700 bar)
LM4D	Lifting Manifold, 4 Port, Double Acting	10.65 in / 27.05 cm	16.15 in / 41.02 cm	13.38 in / 33.97 cm	55.8 lb / 25.3 kg	10,000 psi (700 bar)

Model Shown:

9042DG, 9042DG1500



Features

- Digital gauge is easier to read and offers better accuracy than a conventional analog gauge.
- The laser welded stainless steel sensor & socket and the IP67 weatherproof rating make this product suitable for use in the most demanding of applications.
- Five pre-programmed engineering units allow technicians to read pressure in the unit of measure most applicable to the process.
- The gauge also features a bar graph display feature for enhanced visibility.
- Includes automatic-off battery conservation, pressure tare, minimum pressure memory and maximum pressure.
- Vibration & shock tested to MIL-STD-202G.
- Agency Compliance / Approval: RoHS, CE, ASME B40.7, UL, cUL 61010-1.
- The gauges are calibrated for life at the factory and can be certified in the field, if required.

Other Digital Gauges - DG100



- **DG100** (psi) digital gauge.
- **DG100B** (bar) digital gauge.

Upgrade to **DG100 or DG100B** when:

- Hi/Low alarms required.
- Relays triggered by Hi/Low pressure.
- Pressure display needs to be remotely mounted from measurement location.
- Accurate within 1% @ Full Scale.

Power Team's 9042DG was the perfect choice in accurately monitoring the force applied in this H frame press application.



Technical Attributes



1. Protective rubber boot
2. Back-light and large 0.48" (12.2 mm) display easy reading
3. Displays in multiple engineering units: psi, bar, mPa, inHg, kg/cm^2
4. Weatherproof IP67 enclosure
5. 2,000 hr. life, (2) AA (LR6) batteries
6. Typical Cycle Life: 10,000,000
7. 1/4" NPTF Male Threads (9042DG); 9/16-18 UNF-2B * (9042DG1500)

* High pressure 60° cone port.

Technical Specifications

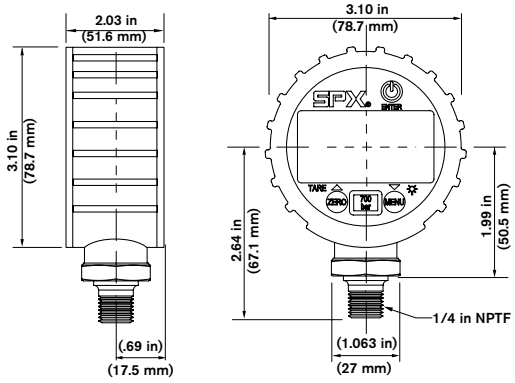

Typical Mounting Setups for 9042DG

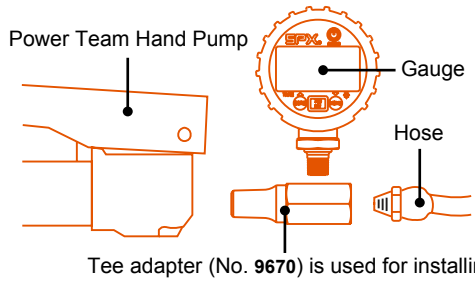

Tee adapter (No. **9670**) is used for installing a gauge in line in a hydraulic circuit.

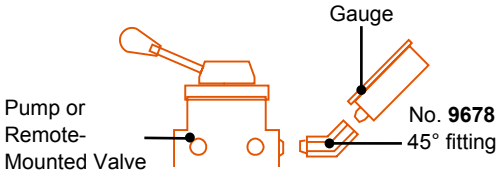

Hardware Requirements for 9042DG



1. Does your pump have a 3/8" or 1/4" NPTF port?
2. Are you direct-plumbing the gauge to your tool or seeking to quick- disconnect?
3. Refer to the Power Team Catalog under the accessories section for a comprehensive range of fittings and couplers to meet your needs.

Custom Scale

User programmable unit of measure allows you to set a custom scale to have the gauge display torque, force or weight to match the cylinder or tool being used.

Safety Tip

When using couplers to detach the gauge, always use a metal cover (ordered separately) on the pump side (female) coupler when the gauge is removed.

Ordering Information

Order No.	Face Dia. (in.)	Rated Pressure (psi.)	Temp Range (°F)	Tool Use	IP Rating	Batteries Included	Battery Life (hrs.)	F.S. Accuracy	Prod. Weight (lb.)
9042DG	2.5	0-10,000	-4 to +140	All	IP67	2 x AA (LR6)	2,000	0.50%	0.53
9042DG1500	2.5	0-21,750	-4 to +140	All	IP67	2 x AA (LR6)	2,000	0.25%	0.53

	Order No.	Description
	9190	**Hydraulic tubing.** 3/8" O.D. x .065" wall, 50 ft. (10 pieces 5 feet long.) Wt. 12.0 lbs.
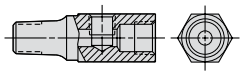	9670	**Tee adapter.** For installing gauge between pump and hose coupling. Has 1/4" and 3/8" NPTF female and 3/8" NPTF male ports. Wt. 0.5 lb.
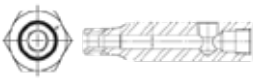	9670XL	**Extended tee adapter.** For installing gauge between pump and hose coupling. Has 1/4" and 3/8" NPTF female and 3/8" NPTF make ports. Wt. 0.74 lb.
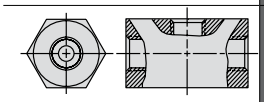	9671	**Double tee adapter.** Permits use of more than one cylinder in series with one pump. Three 3/8" NPTF female ports. Wt. 1.0 lb.
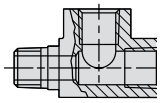	9672	**Service tee.** Two 3/8" NPTF female internal, one 3/8" NPTF male external. Wt. 0.6 lb.
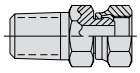	9673*	**Swivel connector.** 3/8" NPSM male, 1/4" NPSM female. Wt. 0.2 lb.
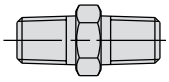	9674	**Male connector.** 1-11/16" long, 1/4" x 3/8" NPTF. Wt. 0.2 lb.
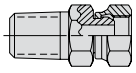	9675*	**Swivel connector.** 3/8" NPTF male, 3/8" NPSM female. Wt. 0.2 lb.
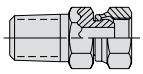	9676*	**Swivel connector.** 1/4" NPTF male, 3/8" NPSM female. Wt. 0.2 lb.
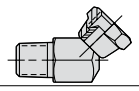	9677*	**45° swivel connector.** 3/8" NPTF male, 3/8" NPSM female. Wt. 0.3 lb
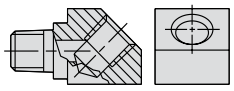	9678	**45° fitting.** Used when mounting gauge at an angle on connection such as 9670. Male and female 1/4" NPTF ends. Wt. 0.3 lb.
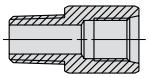	9679	**Connector.** 1/4" NPTF female and 3/8" NPTF male. Wt. 0.1 lb.
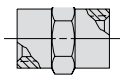	9680	**Coupling.** Both ends 3/8" NPTF female. Wt. 0.2 lb.
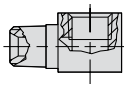	9681	**Street elbow.** Male and female 3/8" NPTF ends. Wt. 0.3 lb.
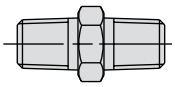	9682	**Male connector.** 1-11/16" long, 3/8" NPTF male ends. Wt. 0.1 lb.

	Order No.	Description
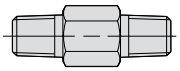	9683	**Male connector.** 2-1/4" long, 3/8" NPTF male ends. Wt. 0.2 lb.
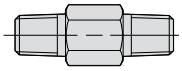	9684	**Male connector.** 2-1/4" long, 1/4" NPTF male ends. Wt. 0.2 lb.
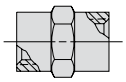	9685	**Coupling.** 1/4" NPTF female and 3/8" NPTF female. Wt. 0.2 lb.
	9686	**90° elbow.** 3/8" NPTF female ends. Wt. 0.4 lb.
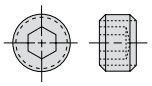	9687	**Pipe plug.** Heat-treated, 3/8" NPTF. Wt. 0.1 lb.
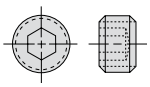	9688	**Pipe plug.** Heat-treated, 1/4" NPTF. Wt. 0.1 lb.
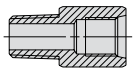	9689	**Connector.** 1/4" NPTF male and 3/8" NPTF female. Wt. 0.2 lb.
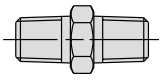	9690	**Male connector.** 1-11/16" long, 1/4" NPTF male ends. Wt. 0.1 lb.
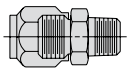	9692	**Straight connector.** 3/8" tube x 3/8" male NPTF. Wt. 0.2 lb.
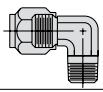	9693	**90° elbow.** 3/8" tube x 3/8" male NPTF. Wt. 0.2 lb.
	9694	**45° elbow.** 3/8" tube x 1/4" male NPTF. Wt. 0.2 lb.
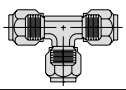	9695	**Tee.** 3/8" tube. Wt. 0.3 lb.
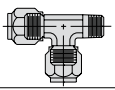	9696	**Male run tee.** 3/8" tube x 1/4" male NPTF. Wt. 0.3 lb.
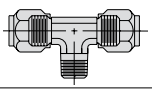	9697	**Male branch tee.** 3/8" tube x 1/4" male NPTF. Wt. 0.3 lb.
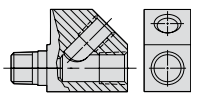	9699	**45° gauge fitting.** 3/8" NPTF male and female, and 1/4" NPTF female at 45°. Wt. 0.6 lb.
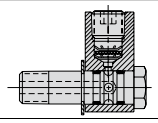	9705	**Fitting, swivel.** 3/8" NPTF male to 3/8" NPTF female. 90° fitting with internal 370 micron screen. May be rotated 360° about male thread axis.

* ⚠ **CAUTION:** On part numbers 9673, 9675, 9676 and 9677 the female swivel end of these adapters is a straight pipe thread (NPSM) with a 30° seat. All male pipe fittings that are used with these female swivel adapters must have an internal 30° seat in order to effect a proper seal. All Power Team male fittings are manufactured with a 30° seat except 9687 and 9688.

NOTE: Power Team hydraulic fittings are intended for use with our high pressure hydraulic products and are suitable for use at max. working pressures of 10,000 psi unless otherwise noted.

MANIFOLD BLOCKS

Select from a wide assortment of high pressure manifold blocks to customize your system.

	Order No.	Description
	9691	**"Y" Manifold.** Extremely useful when connecting two hydraulic cylinders to a single line. Has three 3/8" NPTF ports. Wt. 1.0 lb.
	9634	**Manifold block.** This manifold is for multiple-cylinder installations, has four 3/8" NPTF ports and two 1/4" mounting holes. 2" Square 1.5" thick. Wt. 1.5 lbs.
	9635	**Manifold block.** This hex-shaped manifold offers extra versatility with six 3/8" NPTF ports and two 1/4" mounting holes. 2.5" Hex x 1.25 thick. Wt. 2.0 lbs.
	9617	**Manifold block.** When a multiple-cylinder installation is required, this manifold is invaluable. Has six 3/8" NPTF ports to handle larger multiple-cylinder systems. Wt. 3.0 lbs.
	9648	**Manifold block.** This 7" long manifold block has seven 3/8" NPTF ports and two 1/4" mounting holes. Wt. 2.7 lbs.
	9627	**Manifold block.** This 16" long manifold block allows you to mount the 9575 or 9596 valves without interference. Has seven 3/8" NPTF ports and two 1/4" mounting holes. Wt. 6.0 lbs.
	9626	**Pump-mounted, manifold block.** Converts pump-mounted valves for use with remote-mounted valves. This manifold block is sub-plate mounted on the pump cover plate and provides 3/8" NPTF pressure and return ports. Maximum recommended flow rate is 5 gpm. **Note:** If used on PE30 or PG30 series pump, 1/2" longer mounting screws are required. Order four (4) No. 11956 screws separately.

MANIFOLD BLOCKS WITH NEEDLE VALVES

For independent multiple-cylinder operation, feature needle valves for precise manual control.

	Order No.	Description
	9642	**2-Port Manifold.** Manifold with two needle valves for control of two cylinders. Has four 3/8" NPTF ports. Wt. 8.2 lbs.
	9644	**4-Port Manifold.** Manifold with four needle valves for control of four cylinders. Has six 3/8" NPTF ports. Wt. 16.2 lbs.

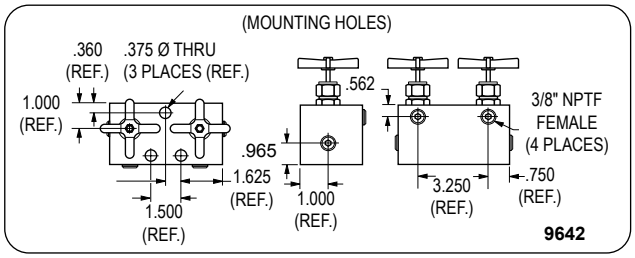

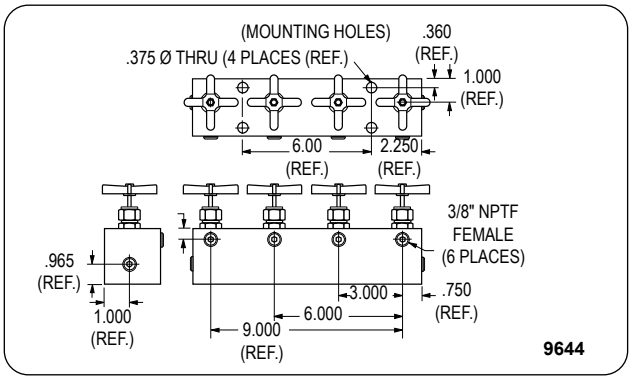

Technical Dimensions

Manifold Number	A (in.)	B (in.)	C (in.)
9627	16.00	4.50	1.50
9648	7.00	1.50	1.50

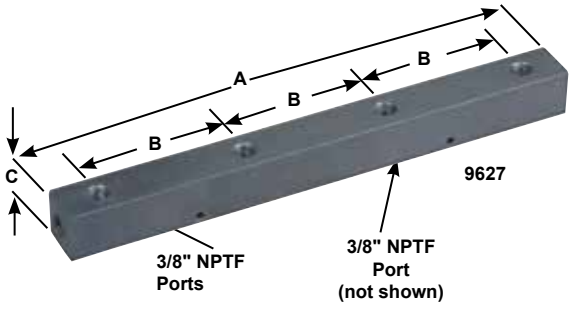

Return to Top

THE PREFERRED CHOICE FOR HEAVY-DUTY, RIGID SHOP EQUIPMENT

Every piece of shop equipment goes through a detailed fabrication and assembly process, and is throughly inspected to ensure maximum performance in the field.

- Wide selection of H-Frame, C-Frame, and load positioning equipment to fit a wide range of applications.
- Turnkey models from available with a variety of power units ranging in manual, electric, air, and gas-driven variations.
- Array of reservoir sizes from 0.25 to 55 gallons
- Valve configurations, such as dump, 2-way, 3-way and 4-way in manual and solenoid options,
- Hydraulic flow up to 420 cu. in. @ 10,000 PSI.



POWERTHON LIFETIME WARRANTY

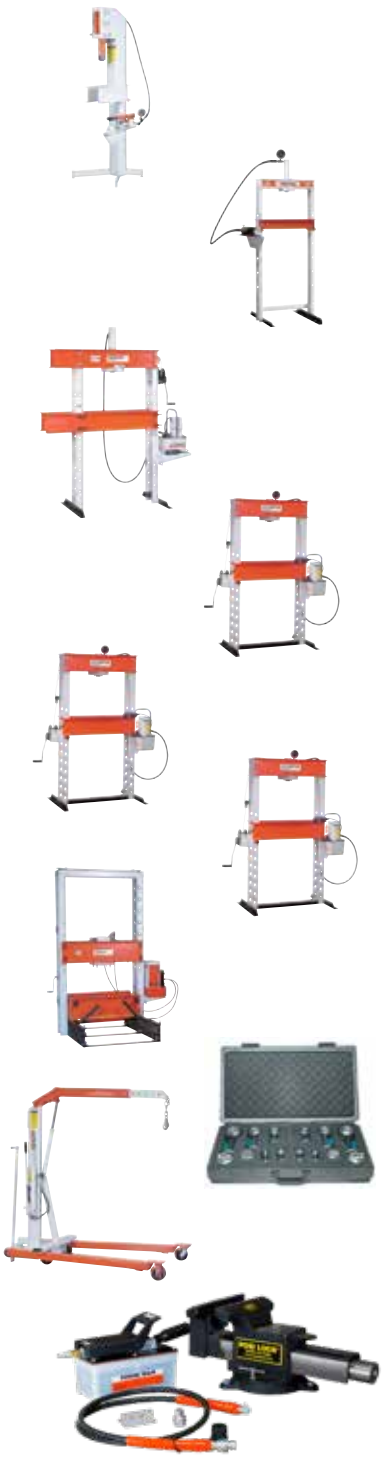

Section / Series	Shop Equipment	Cylinder Type	Tonnage Range	Pages
Introduction	—	—	—	147-148
SPM, SPX	C-Frame	Single-Acting, Spring Return	25	149
SPM, SPH, SPX	H-Frame	Single-Acting Double-Acting	10	150
SPA, SPM, SPX	H-Frame Economy	Single-Acting	25	151
SPA, SPM, SPX	H-Frame Open-End-Access™	Single-Acting Double-Acting	25	152
SPA, SPM, SPX	H-Frame	Single-Acting Double-Acting	55	153
SPM, SPX	H-Frame	Single-Acting Double-Acting	100	154
SPX	H-Frame	Double-Acting	150-200	155-156
RB	H-Frame Roll-Bed®	Double-Acting	80-200	157-158
AT	Alignment Tools	—	—	159-160
FC	Floor Cranes	—	—	161
PT	Bench Vise	—	5	162



SELECTING THE RIGHT SHOP EQUIPMENT:

Step 1 What is the largest size of material you will be working with on your application?

Step 2 What capacity, or pressure, is required to perform the work?

Step 3 What is the speed, or frequency, the press will be operated. (ad-hock or production use)?

SHOP EQUIPMENT SIZING CONSIDERATIONS:

Knowing how a hydraulic press operates can help you determine whether or not you need one for your application. If a press is needed, ask yourself these four questions.

1. What is the size of the largest work piece? For arbor and H-Frame presses, this will dictate the throat size (horizontal opening) and daylight (vertical space required).
2. What pressure is required OR what capacity is required? For arbor presses and H-Frame presses this will dictate how much force is required to perform the pressing operation. It is recommended to always double the tonnage required. This prevents premature wear of continually using the press at it's maximum capacity. Due to not maxing out the press capacity, you will have less wear and tear on both the machine and the operator.
3. What speed and/or frequency do I need to operate the press?
4. How many parts or operations per shift is required? If the required amounts are quite high, an electric or air model power pump would be more suited verses a manual hand pump.

When selecting Power Team's Shop Equipment, you will need to select the type of press style, cylinder size and prime mover to operate and control the press.

Basic components for our shop equipment:

- A pump (or prime mover) is used to transfer the oil from a reservoir out to the tool. This can be in the form of an electric, air or manual pump.
- A control valve is used to divert or meter the flow / direction / volume of the oil out to the tool.
- A cylinder or work-head is used to fill the area above the piston cap with oil through the A-port. This forces the piston down.
- The control valve then redirects the oil either to the B-port for double-acting cylinders or diverts it back to the reservoir on spring return single-acting cylinders.



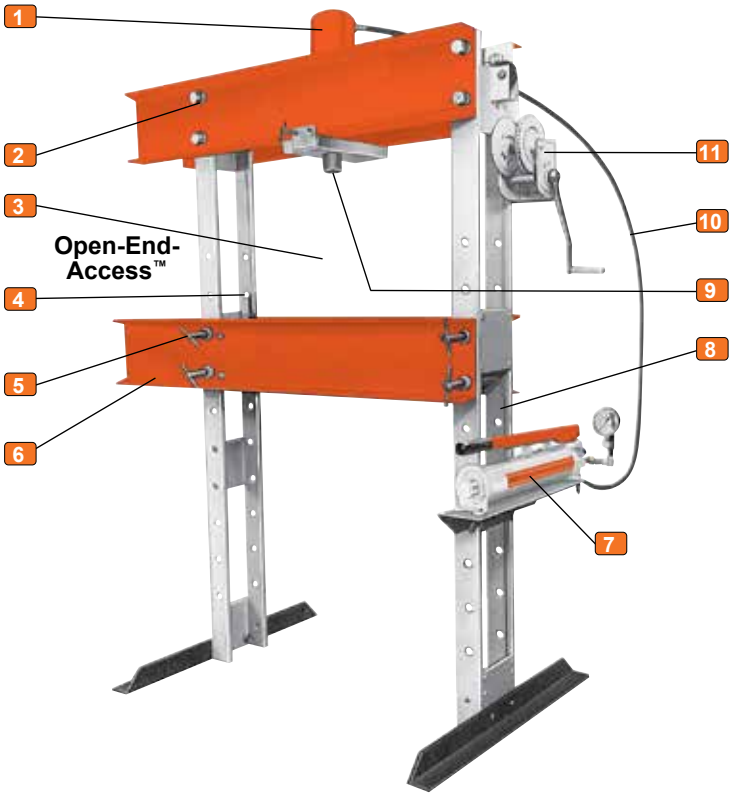

Horizontal pressing capabilities

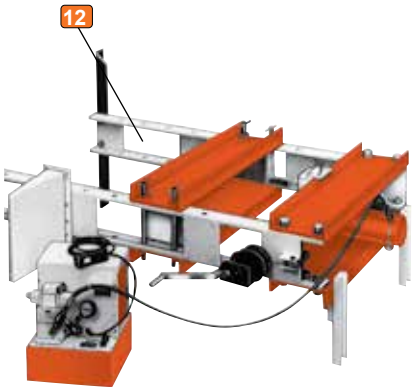

⚠ IMPORTANT SAFETY INFORMATION:

Power Team has protective blankets available which may afford protection from injury to users and others should part breakage occur. Power Team recommends the use of these blankets for all pushing, pulling, pressing, and lifting applications.

1 2 TO 1 SAFETY FACTOR Hydraulic cylinders meet ASME B30.1 standards. Single or double-acting cylinders are available.

2 FULL RATED CAPACITY Across width of upper frame, even with work-head moved to one side. (Heavy-duty presses only).

3 LARGER WORK AREA than most competitors' models.

4 ALIGNMENT LEVER for simple pin replacement after raising or lowering the bed.

5 CLOSE MANUFACTURING TOLERANCE allows even load distribution over four alloy steel pins, not two, like some competitors. (Heavy-duty presses only).

6 OPEN-END-ACCESS™ FEATURE on 25 ton press provides additional work area by mounting cylinder on outside for C-frame advantage.

7 ELECTRIC, AIR OR HAND HYDRAULIC PUMPS are available. All are standard Power Team pumps. Externally-adjustable relief valve for precise operator control of working pressure is standard on all electric pumps (except PE10 and PE17 series.)

A 24VAC hand switch for remote control on pumps equipped with solenoid valves.

Note: CSA approved electric pumps are standard on all presses.

8 RUGGED UPRIGHTS, 50 percent stronger than channel iron. Four post design means open side for easy loading of long material.

9 FAST CYLINDER APPROACH to work provided by 2-speed hand, air or electric pumps.

10 3/8" I.D. HOSE on spring return cylinders on heavy-duty presses provides up to six times faster cylinder return than standard 1/4" I.D. hose.

11 ONE-PERSON OPERATION for bed adjustment. Winch unit quickly raises or lowers bed to desired height. Self-locking winch mechanism prevents bed from dropping when handle is released.

12 FRAMES CAN BE USED HORIZONTALLY for pressing jobs on extra-long shafts.

NOTE: Certain features do not apply to Power Team 10 ton, Roll-Bed®, or economy presses.

NOTE: Certain press applications may require guarding. Because of the multitude of possible press uses, it is impossible to design a guard that will meet every customer need. The end-user must provide their own guarding where the situations dictate.

Model Shown:
SPM256C



Features

C-FRAME PRESSES

- Open-End-Access™ design makes loading and unloading of work easy.
- Bench mount requires less than 1.5 sq. ft. of space.
- Cylinder head adjusts to three convenient working positions, providing up to 20.25" of "daylight."
- Can be bench-mounted or mounted on optional base.
- Hydraulic cylinder delivers a 6.25" stroke and is driven by a P59 two-speed hand pump.

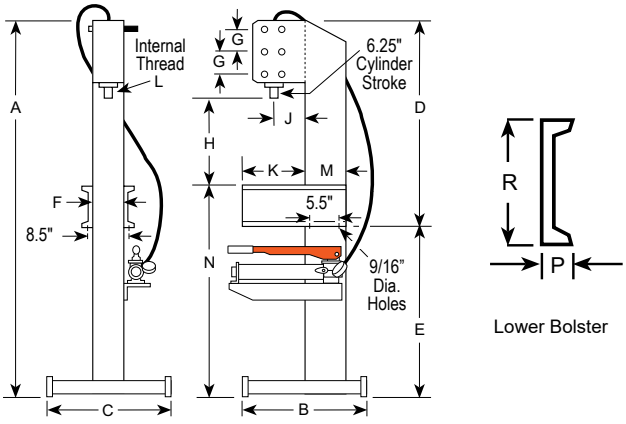

Optional Pedestal Base



No. 60846 – Provides a stable base for SPM256C. Includes a bracket for mounting the pump on the side of pedestal press. Only 4 sq. ft. of floor space is needed.
Wt., 76 lbs.



Technical Dimensions

							Cyl. Retracted										Floor Space
A	B	C	D	E	F	G	H			J	K	L	M	N	P	R	
(in.)	(in.)	(in.)	(in.)	(in.)	(in.)	(in.)	(in.)	(in.)	(in.)	(in.)	(in.)	(in.)	(in.)	(in.)	(in.)	(in.)	(in.)
77.63	24.50	24.00	41.63	36.00	6.00	5.00	10.25	15.25	20.25	6.25	12.50	1 1/2 - 16	8.00	43.00	2.00	7.00	24 x 24.50

Ordering Information

Order No.	Cap. (tons)	Type Cyl. Used	Stroke (in.)	Cyl. Model	Speed †† Advance Pressing (in. / stroke)	Speed †† Advance Pressing (in. / stroke)	Type of Pump	Pump Model	Prod. Wt. (lbs.)
SPM256C *	25	Single-Acting	6.25	C256C	0.129	0.03	Hand	P59	240.00
SPX256C *	25	Single-Acting	6.25	C256C	0.129	0.03	—	—	240.00

* SPM256C and SPX256C does not include No. 60846 pedestal base.

†† Typical performance based on pump specifications. Actual speeds may vary with operating conditions.

Model Shown:

SP1010A, SPM1010



Features

H-FRAME

- Ideal for small pressing jobs, repairing small motor armatures, removing and installing gears, bearings, other press-fit parts.
- Bench press has 15.38" x 18" work area. Floor press bed height is adjustable from 5" to 41" with horizontal “daylight” of 21".
- Choices of power sources include: single-speed hand pump, electric/hydraulic or air/hydraulic.
- Hydraulic gauges, hoses and fittings included.

Pump Electrical Specifications

PE10 Series – 1/4 hp, 115VAC, 60 cycle, single-phase. Also available in 230VAC, 50 cycle (add suffix “-220” to order number).

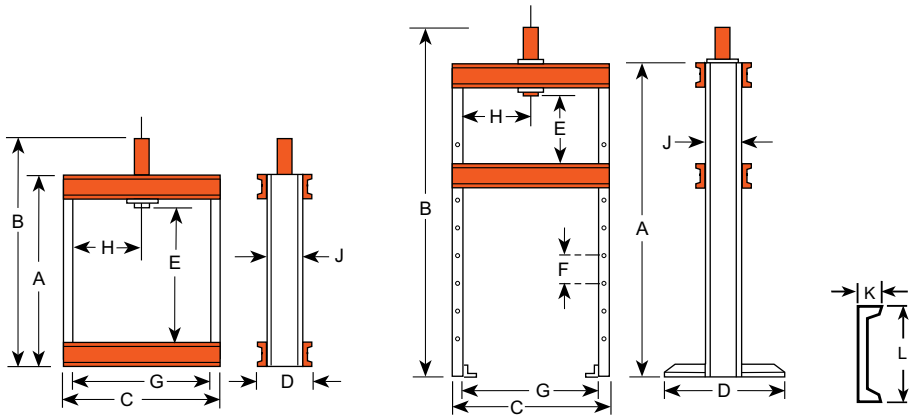

Technical Dimensions

Frame	A	B	C	D	E	F	G	H	J	K	L	Bench Space	Floor Space
	(in.)	(in.)	(in.)	(in.)	(in.)	(in.)	(in.)	(in.)	(in.)	(in.)	(in.)	(in.)	(in.)
Bench	24.50	33.13	25.25	7.19	15.38	—	22.00	11.00	4.00	1.56	4.00	7.19 x 25.25	—
Floor	59.00	67.63	25.25	28.00	5 - 41	6.00	22.00	2.50 - 18.50	4.00	1.56	4.00	—	28.00 x 28.25

Ordering Information

Order No.	Frame	Cap.	Type Cyl. Used	Stroke	Cyl. Model	Speed ††† Advance Pressing		Type of Pump	Pump Model	Prod. Wt.
		(tons)		(in.)		(in. / min.)	(in. / min.)			(lbs.)
SPM1010	222481 Bench	10	Single-Acting	10 1/8	C1010C	.06 in./stroke		Hand	P55	91
SPH1010	222480 Floor	10	Single-Acting	10 1/8	C1010C	.06 in./stroke		Hand	P55	171
SPE1010	222480 Floor	10	Single-Acting	10 1/8	C1010C	0.2	2.2	Elec.†	PE102	175
SPX1010	222480 Floor	10	Single-Acting	10 1/8	C1010C	-	-	-	-	155
SP1010A	222480 Floor	10	Single-Acting	10 1/8	C1010C	0.3	3.7	Air	PA9H	162
SPE1010D	222480 Floor	10	Double-Acting	10	RD1010	0.2	2.2	Elec.†	PE104	192
SPX1010D	222480 Floor	10	Double-Acting	10	RD1010	-	-	-	-	172

† “Advance” position holds pressure with motor shut-off. “Return” position advances cylinder with motor running and returns cylinder with motor shut-off.

††† Typical performance based on 100 psi and 10,000 psi pump specifications. Actual speeds may vary with operating conditions.

Model Shown:
SPE256



Features

ECONOMY PRESSES

- Rugged, yet reasonably priced. Handles many “big press” tasks, and perfect for many of the “in-between” jobs you see almost daily.
- Press bed height easily adjustable with winch. Bed will not drop when handle is released.
- Choice of power sources for rapid cylinder advance: two-speed hydraulic hand pump, electric/hydraulic or air/hydraulic. (**Note:** Stroke length limited to 6-1/4”on economy models).

Pump Electrical Specifications

Pump Series	Description
PE17	1/2 hp, 115VAC, 60 cycle, single-phase.
PE21	1 hp, 115VAC, 60 cycle, single-phase.

Both pumps available in 230VAC, 50 cycle, add suffix “-220” to order no.

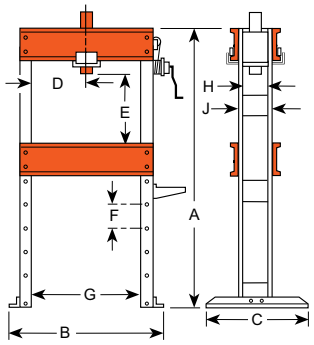

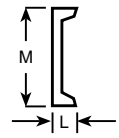

Lower Bolster

Technical Dimensions

A (in.)	B (in.)	C (in.)	D* (in.)	E (in.)	F (in.)	G (in.)	H (in.)	J (in.)	K (in.)	L (in.)	M (in.)	Floor Space (in.)
58.00	43.00	28.00	3 - 29	6.88 - 43.38	4.50	32.00	5.50	6.50	7.00	2.50	8.00	43 x 28

* Lateral head movement

Ordering Information

Order No.	Cap. (tons)	Type Cyl. Used	Stroke (in.)	Cyl. Model	Speed ††† (in. / min.)		Type of Pump	Valve Type	Pump ‡ Model	Prod. Wt. (lbs.)
					Advance	Pressing				
SPA256	25	Single-Acting	6.25	C256C	9.8	1.2	Air	2-Way Foot	PA6	578
SPM256	25	Single-Acting	6.25	C256C	0.129 (in./stroke)		Hand	Load-Release	P59	595
SPE256	25	Single-Acting	6.25	C256C	46.6	3.3	Electric	2-Way††	PE172	607
SPX256	25	Single-Acting	6.25	C256C	-	-	-	-	-	562

†† Holds pressure with motor shut-off. Also has an automatic dump setting. Furnished with a 10’ remote motor control.

††† Typical performance based on 100 psi and 10,000 psi pump specifications. Actual speeds may vary under operating conditions.

‡ Pump standard with press. Other Power Team pumps can be substituted. dBA at idle and 10,000 psi: PE172–67/81 dBA; PE21–70; dBA measured at 3 foot distance, all sides.

Model Shown:
SPE2514



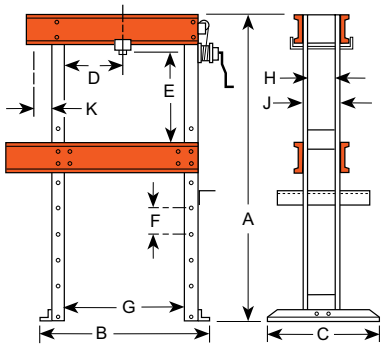

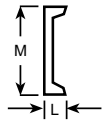

Lower Bolster

Features

OPEN-END-ACCESS™ PRESSES

- Design permits use as both H-Frame and C-Frame press. Cylinder can be mounted on frame extension to handle jobs which won't fit between uprights.
- Open-end-Access™ press models are also available with remote control to enable the operator to view work from all sides with fingertip control of cylinder piston travel.
- Off-center pressing loads of full capacity can be applied across entire width of frame.
- Press bed height easily adjustable with winch. Bed will not drop when handle is released.
- Choice of power sources for rapid cylinder advance: two-speed hydraulic hand pump, electric/hydraulic or air/hydraulic.

Pump Electrical Specifications

Pump Series	Description
PE17	1/2 hp, 115VAC, 60 cycle, single-phase.
PE21	1 hp, 115VAC, 60 cycle, single-phase.

Both pumps available in 230VAC, 50 cycle, add suffix "-220" to order no.

Technical Dimensions

A (in.)	B (in.)	C (in.)	D* (in.)	E (in.)	F (in.)	G (in.)	H (in.)	J (in.)	K (in.)	L (in.)	M (in.)	Floor Space (in.)
58.00	43.00	28.00	3 - 29	6.88 - 43.38	4.50	32.00	5.50	6.50	7.00	2.50	8.00	43 x 28

* Lateral head movement

Ordering Information

Order No.	Cap. (tons)	Type Cyl. Used	Stroke (in.)	Cyl. Model	Speed ††† (in. / min.)		Type of Pump	Valve Type	Pump ‡ Model	Prod. Wt. (lbs.)
					Advance	Pressing				
SPA2514	25	Single-Acting	14.25	C2514C	9.8	1.2	Air	2-Way Foot	PA6	683
SPM2514	25	Single-Acting	14.25	C2514C	0.49 (in./stroke)	0.03 (in./stroke)	Hand	Load-Release	P159	693
SPX2514	25	Single-Acting	14.25	C2514C	-	-	-	-	-	620
SPE2514	25	Single-Acting	14.25	C2514C	46.6	3.3	Electric	2-Way ††	PE172	665
SPE2514S	25	Single-Acting	14.25	C2514C	52	4	Electric	3-Way †	PE213S	759
SPE2514DS	25	Double-Acting	14.25	RD2514	52	4	Electric	4-Way †	PE214S	787
SPX2514D	25	Single-Acting	14.25	C2514C	-	-	-	-	-	742

† Solenoid valve with 24VAC remote control hand switch.

†† Holds pressure with motor shut-off. Also has an automatic dump setting. Furnished with a 10' remote motor control.

††† Typical performance based on 100 psi and 10,000 psi pump specifications. Actual speeds may vary under operating conditions.

‡ Pump standard with press. Other Power Team pumps can be substituted. dBA at idle and 10,000 psi: PE172–67/81 dBA; PE21–70; dBA measured at 3 foot distance, all sides.

Model Shown:

SPE5513DS



Hydraulic gauge and hydraulic fittings are included with presses.

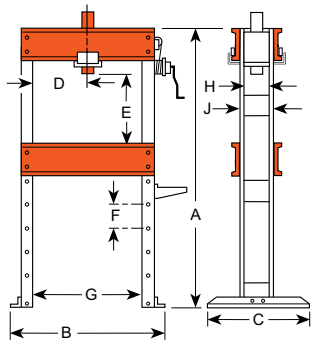

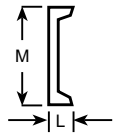

Lower Bolster

Features

H-FRAME SHOP PRESS

- Full off-center pressing at full rated capacity across width of upper frame without buckling or bending.
- Maximum “daylight” is 42” x 36”, making positioning of even bulky work pieces easy.
- Height of press bed is easily adjusted with winch. Friction brake prevents bed from dropping and handle from spinning upon release.
- Presses with single-acting cylinders offer choice of 2-speed hand operated, electric/hydraulic, or air/hydraulic pump. Models with double-acting cylinders have an electric/hydraulic pump.
- Press models equipped with remote control enable operator to view work from all sides with fingertip control of cylinder piston travel.
- Press can be used horizontally for special applications with user-supplied support legs.

Pump Electrical Specifications

Pump Series	Description
PE17 *	1/2 hp, 115VAC, 60 cycle, single-phase.
PE21 *	1 hp, 115VAC, 60 cycle, single-phase.
PQ60 *	2 hp, 230VAC, 60 cycle, single-phase.

* Pumps available in 230VAC, 50 cycle, add suffix “-220” to order no.

Technical Dimensions

A (in.)	B (in.)	C (in.)	D* (in.)	E (in.)	F (in.)	G (in.)	H (in.)	J (in.)	L (in.)	M (in.)	Floor Space (in.)
72.00	48.50	36.00	3.25 - 32.75	6 - 42	6.00	36.00	6.75	8.00	3.00	12.00	48.5 x 36

* Lateral head movement

Ordering Information

Order No.	Cap. (tons)	Type Cyl. Used	Stroke (in.)	Cyl. Model	Speed ††† (in. / min.)		Type of Pump	Valve Type	Pump ‡ Model	Prod. Wt. (lbs.)
					Advance	Pressing				
SPA556	55	Single-Acting	6.25	C556C	4.5	0.5	Air	2-way foot	PA6	804
SPM556	55	Single-Acting	6.25	C556C	.23 (in./stroke)	.015 (in./stroke)	Hand	Load-Release	P159	814
SPM5513	55	Single-Acting	13.25	C5513C	.655 (in./stroke)	.026 (in./stroke)	Hand	2-Way	P460	960
SPE556	55	Single-Acting	6.25	C556C	21.7	1.5	Electric	2-Way ††	PE172	836
SPX556	55	Single-Acting	6.25	C556C	-	-	-	-	-	794
SPE5513	55	Single-Acting	13.25	C5513C	21.7	1.5	Electric	2-Way ††	PE172	980
SPX5513	55	Single-Acting	13.25	C5513C	-	-	-	-	-	938
SPE5513S	55	Single-Acting	13.25	C5513C	24.4	1.9	Electric	3-Way †	PE213S	1056
SPE5513D	55	Double-Acting	13.125	RD5513	21.7	1.5	Electric	4-Way	PE174	993
SPE5513DS	55	Double-Acting	13.125	RD5513	66.1	5.4	Electric	4-Way †	PQ604S	1114
SPX5513D	55	Double-Acting	13.25	RD5513	-	-	-	-	-	824

† Solenoid valve with 24VAC remote control hand switch.

†† Holds pressure with motor shut-off. Also has an automatic dump setting. Furnished with a 10’ remote motor control.

††† Typical performance based on 100 psi and 10,000 psi pump specifications. Actual speeds may vary with operating conditions.

‡ Pump standard with press. Other Power Team pumps can be substituted. dBA at idle and 10,000 psi: PE172—67/81; PE21 Series—70; PQ60—74/76; measured at 3 foot distance, all sides.

Note: Frame is shipped assembled.

Model Shown:
SPE10013DS



Hydraulic gauge and hydraulic fittings are included with presses.

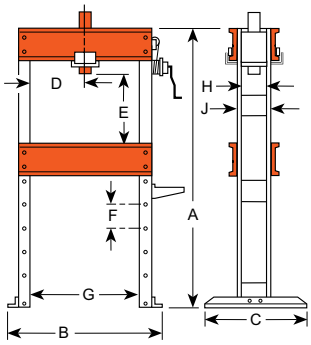

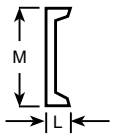

Lower Bolster

Features

H-FRAME SHOP PRESS

- Cylinder work-head glides across upper frame on rollers, locks in place for off-center pressing jobs. May be used horizontally for special pressing applications with user-supplied supports.
- Press bed is raised and lowered by winch which locks in place for insertion of bed retaining pins. Upper bolster can be lowered 8" for convenient positioning on repetitive jobs.
- Generous "daylight" of 42" x 50" accommodates bulky work pieces, uprights are placed for easy side entry of bars or shafts for straightening or bending.
- Choice of single or double-acting cylinder. Hydraulic pump options include: 2-speed hand pump with large 2-gallon reservoir, PE172 electric/hydraulic pump or "PQ" series "Quiet" electric/hydraulic pump with low noise level.

Pump Electrical Specifications

Pump Series	Description
PE17 *	1/2 hp, 115VAC, 60 cycle, single-phase.
PQ60 *†	2 hp, 230VAC, 60 cycle, single-phase.
PQ120 **	3 hp, 460VAC, 60 cycle, three-phase.

* Pumps available in 230VAC, 50 cycle, add suffix "-220" to order no.
† For 115VAC, consult factory.
** Pump available in 220/380VAC, 50 cycle. To order 380VAC, 50 cycle, add suffix "-380" to order no.

Technical Dimensions

A	B	C	D*	E	F	G	H	J	L	M	Floor Space
(in.)	(in.)	(in.)	(in.)	(in.)	(in.)	(in.)	(in.)	(in.)	(in.)	(in.)	(in.)
77.25	64.00	36.00	7 - 43	2 - 42	8.00	50.00	8.00	10.00	3.38	15.00	36 x 78.25

* Lateral head movement

Ordering Information

Order No.	Cap. (tons)	Type Cyl. Used	Stroke (in.)	Cyl. Model	Speed ††† (in. / min.)		Type of Pump	Valve Type	Pump ‡ Model	Prod. Wt. (lbs.)
					Advance	Pressing				
SPM10010	100	Single-Acting	10.25	C10010C	0.356 (in./stroke)	0.01 (in/stroke)	Hand	3-way	P460	1698
SPE10010	100	Single-Acting	10.25	C10010C	35	2.9	Electric	3-way	PQ603	1795
SPX10010	100	Single-Acting	10.25	C10010C	-	-	-	-	-	1626
SPE10010R	100	Single-Acting	10.25	C10010C	11 1/2	0.8	Electric	2-way	PE172	1690
SPX10013D	100	Double-Acting	13.125	RD10013	-	-	-	-	-	1722
SPE10013DS	100	Double-Acting	13.125	RD10013	35	5.8	Electric	4-way †	PQ1204S	1886

† Solenoid valve with 24VAC remote control hand switch.
††† Typical performance based on 100 psi and 10,000 psi pump specifications. Actual speeds may vary under operating conditions.
‡ Pump standard with press. Other Power Team pumps can be substituted. dBA at idle and 10,000 psi: PE172—67/81; PQ60—74/76; PQ120—73/78. Measured at 3 foot distance, all sides.
Note: Frame is shipped assembled.

Model Shown:
SPE20013DS



Hydraulic gauge and hydraulic fittings are included with presses.

Features

H-FRAME SHOP PRESS

- Standing 7.5 feet tall, these giants handle the really big jobs.
- May be used horizontally for special pressing applications with user-supplied supports.
- Work-head has wide horizontal travel. Rugged press frame withstands load of rated capacity across full width of frame.
- Winch mechanism provides easy positioning of press bed, locks in place for insertion of retaining pins.
- Upper bolster can be lowered 11” for convenient positioning on repetitive jobs.
- Uprights are placed for easy side entry of bars or shafts for straightening or bending.
- Fast cylinder approach is provided by PQ1204S “Quiet” electric/hydraulic pump.
- Remote control hand switch, enables operator to view work from all sides with fingertip control of cylinder piston travel.

Pump Electrical Specifications

Pump Series	Description
PQ120	3 hp, 460VAC, 60 cycle, three-phase. Also available in 220/380VAC, 50 cycle, add suffix “-380” to order no.

NOTE: To order press with 230VAC, 60 cycle, single-phase pump, order press less PQ1204S. Order pump No. PQ604S separately.



Adjustable head accommodates a wide array of applications



Winch provides easy positioning of press bed



Large footing for a solid base and stability

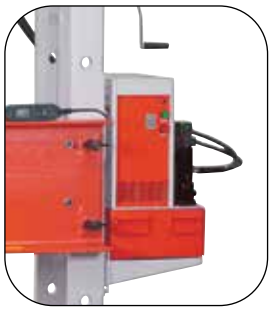

PQ120 Series pump provides the pressure and control

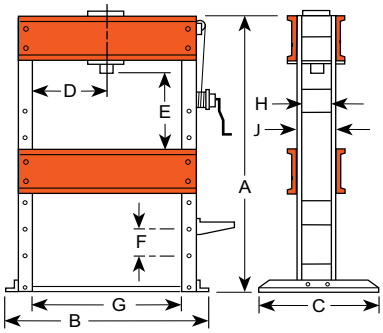

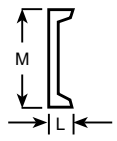

Lower Bolster

Shop Equip.

Technical Dimensions

A	B	C	D*	E	F	G	H	J	L	M	Floor Space
(in.)	(in.)	(in.)	(in.)	(in.)	(in.)	(in.)	(in.)	(in.)	(in.)	(in.)	(in.)
90.00	71.00	44.00	11 - 39	9 - 43.75	11.00	50.00	12.50	15.00	4.13	18.00	44 x 71

* Lateral head movement

Ordering Information

Order No.	Cap. (tons)	Type Cyl. Used	Stroke (in.)	Cyl. Model	Speed ††† (in. / min.)		Type of Pump	Valve Type	Pump ‡ Model	Prod. Wt. (lbs.)
					Advance	Pressing				
SPX15013D	150	Double-Acting	13.125	RD15013	-	-	-	-	-	2851
SPE15013DS	150	Double-Acting	13.125	RD15013	24	3.9	Electric*	4-way **	PQ1204S	3015
SPX20013D	200	Double-Acting	13.125	RD20013	-	-	-	-	-	3112
SPE20013DS	200	Double-Acting	13.125	RD20013	18	2.9	Electric*	4-way **	PQ1204S	3276

Note: Frame is shipped assembled.
* Pre-wired at factory for 460VAC.
** Solenoid valve with 24VAC remote control hand switch.
††† Typical performance based on 100 psi and 10,000 psi pump specifications. Actual speeds may vary under operating conditions.
‡ Pump standard with press. dBA at idle and 10,000 psi: 73/78, measured at 3 foot distance, all sides.

Model Shown:
RB10013S

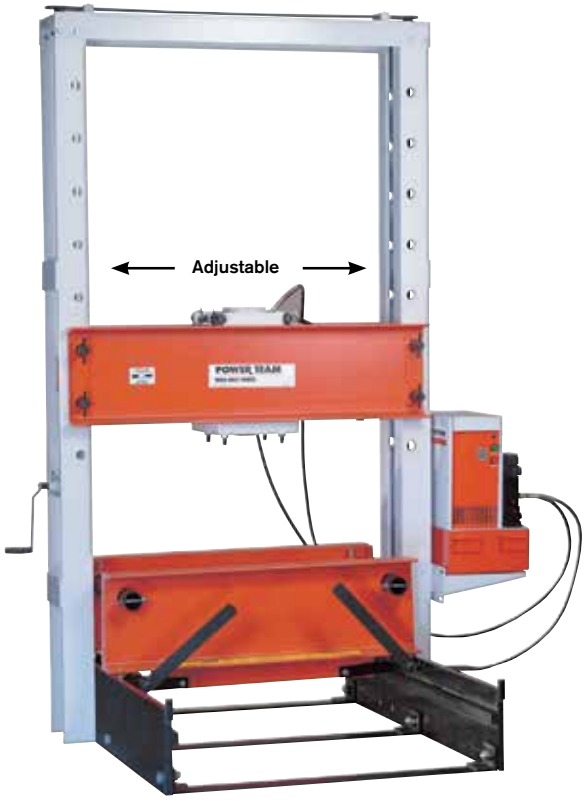

Hydraulic gauge and hydraulic fittings are included with presses.

Features

H-FRAME ROLL-BED® PRESS

- The original, patented Roll-Bed® extends out for easy loading and unloading with a crane or other lifting device, supporting loads up to 3,000 lbs.
- Movable work-head glides easily side-to-side for full off-center load capacity across width of upper frame.
- "Daylight" is 50.5" x 60" for 80 and 100 ton models; 51.25" x 64" on 150 and 200 ton presses.
- Fast approach of double-acting, 13.125" stroke cylinder is provided by PQ1204S "Quiet" electric/hydraulic pump with remote control hand switch. Operator can view work from all sides with fingertip control of cylinder piston travel.
- Adjustable lower bed width for secure balancing and centering of heavy jobs.
- Lifting mechanism has a turn crank handle to raise or lower upper bolster (a heavy-duty 1/2" drill motor can replace handle for automatic adjustment). Four locking pins hold bolster in place for pressing.

Pump Electrical Specifications

Pump Series	Description
PQ120	3 hp, 460VAC, 60 cycle, three-phase. Available in 220/380VAC, 50 cycle, add suffix "-380" to order no.

NOTE: To order press with a 230VAC, 60 cycle, single-phase pump, order press less PQ1204S. Order pump No. PQ604S separately.

NOTE: Different voltage and valve options can be obtained by substituting certain PA, PE or PQ series pumps. Consult the factory.

Roll-bell enables easy loading and unloading of large gears to simplify the pressing operation.





Lifting screw and locking pins make bolster raising a one-man job.



Bearings make bed positioning smooth and easy.



Lever lowers bed for pressing, raises it for rolling.



Cylinder is easily moved across width of upper bolster.

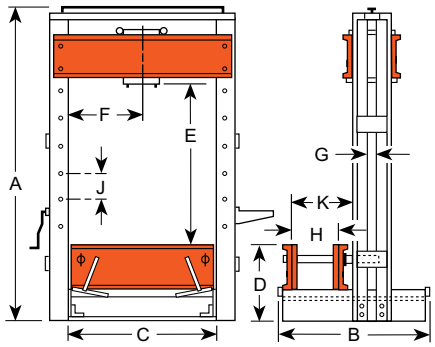

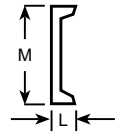

Lower Bolster

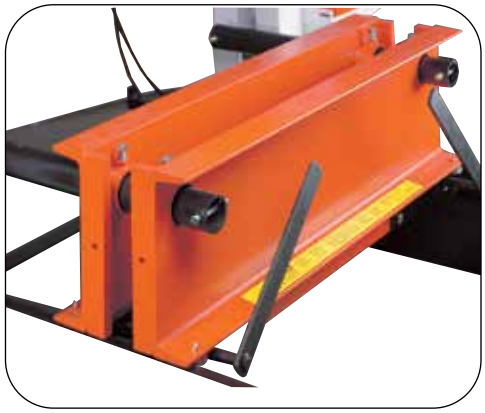

Width adjusts from 4" to over 27" & is secured with locking bolts.

Technical Dimensions

Cap.	A	B	C	D	E	F	G	H	J	K	L	M	Floor Space
(Tons)	(in.)	(in.)	(in.)	(in.)	(in.)	(in.)	(in.)	(in.)	(in.)	(in.)	(in.)	(in.)	(in.)
80	112.63	64.25	50.50	27.00	12 - 60	14.50 - 36.00	3.00	4.00 - 27.25	8.00	36.50	3.38	15.00	64.25 x 60.50
100	112.63	64.25	50.50	27.00	12 - 60	14.50 - 36.00	3.00	4.00 - 27.25	8.00	36.50	3.38	15.00	64.25 x 60.50
150	123.25	68.25	51.25	30.00	9 - 64	13.88 - 37-88	3.00	4.00 - 27.13	11.00	37.25	4.13	18.00	68.25 x 63.25
200	122.25	68.25	51.25	30.00	9 - 64	15.13 - 36.13	3.00	4.00 - 27.13	11.00	37.25	4.13	18.00	68.25 x 63.25

Ordering Information

Order No.	Cap. (tons)	Type Cyl. Used	Stroke (in.)	Cyl. Model	Speed ††† (in. / min.)		Type of Pump	Valve Type	Pump ‡ Model	Prod. Wt. (lbs.)
					Advance	Pressing				
RB8013S	80	Double-Acting	13.125	RD8013	46	7.5	Electric	4-way †	PQ1204S	2886
RB8013X	80	Double-Acting	13.125	RD8013	-	-	-	-	-	2722
RB10013S	100	Double-Acting	13.125	RD10013	35	5.8	Electric	4-way †	PQ1204S	2944
RB10013X	100	Double-Acting	13.125	RD10013	-	-	-	-	-	2780
RB15013S	150	Double-Acting	13.125	RD15013	24	3.9	Electric	4-way †	PQ1204S	4458
RB15013X	150	Double-Acting	13.125	RD15013	-	-	-	-	-	4294
RB20013S	200	Double-Acting	13.125	RD20013	18	2.9	Electric	4-way †	PQ1204S	4546
RB20013X	200	Double-Acting	13.125	RD20013	-	-	-	-	-	4382

Note: Frame is shipped assembled.

† Solenoid valve with 24VAC remote control hand switch.

††† Typical performance based on 100 psi and 10,000 psi pump specifications. Actual speeds may vary with operating conditions. 3,000 lbs. maximum load can be supported on bed when raised on the rollers.

‡ Pump standard with press. dBA at idle and 10,000 psi: PQ120-73/78; measured at 3 foot distance, all sides.

Model Shown:

PTAT-1108, PTAT-1104

Stud Hole: 3/8" to 1-1/4 or 3/8" to 3/4"





Features

ALIGN ROTATING MACHINERY WITH PRECISION.

- Provides the ability to make precise horizontal adjustments within .001" (.025 mm).
- Portable sets allow aligning your motors, pumps, and gear boxes safe, quick, and easy.
- Eliminates the use of jack bolts, frames and heavy hammers for alignment.

Ordering Information

		ALIGNMENT TOOL RANGE			ECCENTRIC SOCKET SIZES				MOTOR APPLICATION		
		Model	Quantity	Tool Range	Socket	Quantity	Socket Size	Stud Hole	Power Range	AC Motor Frame	DC Motor Frame
PTAT-1108	PTAT-1104	PTATN-1	2	13/16" to 1-5/8"	PTES-1	2	9/16"	3/8"	2-30 HP	182-286TS	182A-288A
		PTATN-2	2	7/8" to 2"	PTES-2	2	3/4"	1/2"			
		PTATN-3	2	7/8" to 2-5/8"	PTES-3	2	15/16"	5/8"	20-300 HP	324T-449TS	323A-368A
					PTES-4	2	1-1/8"	3/4"			
		PTATN-4	2	1-1/2" to 4-1/2"	PTES-5	2	1-5/16"	7/8"	300+ HP	5040-505S	403A-448A
					PTES-6	2	1-1/2"	1"			
		PTATN-5	2	1-7/8" to 6-1/8"	PTES-7	2	1-11/16"	1-1/8"	300+ HP	400M-8211S	503A-688A
					PTES-8	2	1-7/8"	1-1/4"			

Model Shown:

PPTM-AT1108, PTM-AT1104

Stud Hole: 8mm to 30mm or 8mm to 12mm





Alignment Tool



Eccentric Socket



Top View Bottom View

Eccentric socket

Easy on easy off design

Precise, smooth, easy motor foot movement



*Kits do not include measurement devices

Ordering Information

		ALIGNMENT TOOL RANGE			ECCENTRIC SOCKET SIZES				MOTOR APPLICATION		
		Model	Quantity	Tool Range	Socket	Quantity	Socket Size	Stud Hole	Power Range	AC Motor Frame	DC Motor Frame
PTM-AT1108	PTM-AT1104	PTATN-1	2	21 to 42 mm	PTES-1	2	13 mm	8 mm	1-22 kW	80-132	132-180
		PTATN-2	2	22 to 51 mm	PTES-2	2	17 mm	10 mm			
		PTATN-3	2	22 to 67 mm	PTES-3	2	19 mm	12 mm	14-224 kW	160-225	200-225
					PTES-4	2	24 mm	16 mm			
		PTATN-4	2	38 to 114 mm	PTES-5	2	30 mm	20 mm	224+ kW	250-355	250-355
					PTES-6	2	36 mm	24 mm			
		PTATN-5	2	48 to 156 mm	PTES-7	2	46 mm	30 mm	224+ kW	400	400

Model Shown:

PTUB200

Stud Hole: 3/8" to 1-1/4 or 3/8" to 3/4"



Features

VIRTUALLY ELIMINATE THE PROBLEM OF BOLT BINDING WITH MOTOR ALIGNMENT.

- Innovative precision undercut bolt and washer system helps reduce downtime and increase productivity
- Maximum clearance hardened grade-8 bolts along with through-hardened plated washers help to maintain perfect alignment.

Includes

Order No.	Size (in.)	Quantity
Undercut Bolts (Diameter x Length)		
PTU5125	5/16 x 1-1/4	12
PTU5150	5/16 x 1-1/2	12
PTU6125	3/8 x 1-1/4	12
PTU6150	3/8 x 1-1/2	12
PTU8150	1/2 x 1-1/2	12
PTU8175	1/2 x 1-3/4	12
PTU8200	1/2 x 2	12
Hardened Washers (Diameter)		
PTUW5	5/16	24
PTUW6	3/8	24
PTUW8	1/2	36

Model Shown:

PTUB300

Diameter: 9/16" to 3/4"



Includes

Order No.	Size (in.)	Quantity
Undercut Bolts (Diameter x Length)		
PTU9150	9/16 x 1-1/2	12
PTU9200	9/16 x 2	12
PTU9250	9/16 x 2-1/2	12
PTU1020	5/8 x 2	12
PTU1022	5/8 x 2-1/4	12
PTU1025	5/8 x 2-1/2	12
PTU1220	3/4 x 2	12
PTU1222	3/4 x 2-1/4	12
PTU1225	3/4 x 2-1/2	12
Hardened Washers (Diameter)		
PTUW5	9/16	36
PTUW6	5/8	36
PTUW8	3/4	36

Model Shown:
FC2200

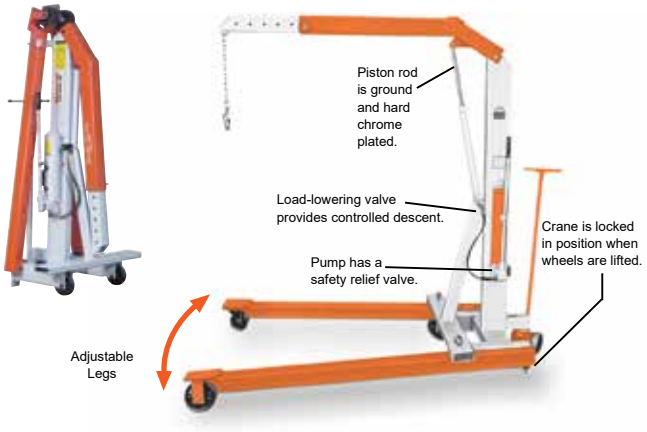

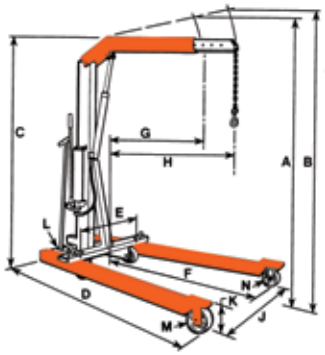

Features

Mobile Floor Cranes

- Adjustable legs spread to clear obstacles (telescoping boom for extra reach)
- Rugged construction, reliable hydraulics.
- Boom collapses completely and legs fold for compact space-saving fold-away storage
- 2-speed hydraulic hand pump provides fast boom travel and precise operator controlled descent.
- Roller bearing wheels and a steering dolly provide ease of mobility. Lifting chain is included.
- U.S. Patent No. 3,367,512

Technical Dimensions

	Description	FC2200	FC4400
A	Max. boom height (ret.)	107"	111"
B	Max. boom height (ext.)	117"	122"
C	Overall height, boom horizontal	80"	82"
D	Overall length	83"	89"
E	Min. throat width	24"	25"
F	Inside leg length	54"	57.5"
G	Eff. boom reach (ret.)	33"	35.5"
H	Eff. boom reach (ext.)	48"	50.5"
J	Inside leg width	24" - 36" - 48" **(3-Position)**	26" - 40" - 52.5" **(3-Position)**
K	Leg height	8"	9.5"
L	Dolly wheel diameter	5"	5"
M	Wheel diameter	6"	8"
N	Caster diameter	6"	6"
	Floor space, folded	27" x 38"	31" x 42"
	Height, folded	79"	86"
	Cap. boom ret. (lbs.)	2,200	4,400
	Cap. boom ext. (lbs.)	1,650	3,300

Ordering Information

Order No.	Description
FC2200	2,200 lbs. cap. crane with fold-away feature, adj. leg spread, lifting chain and 2-speed hand pump. Wt., 454 lbs.
FC4400	4 ,400 lbs. cap. crane with fold-away feature, adj. leg spread, lifting chain and 2-speed hand pump. Wt., 646 lbs.

Model Shown:
PTPHV859ASPX





**Air supply is required when using a hydraulic pump*

Features

HANDS-FREE HYDRAULIC BENCH VISE WITH COMBINATION 10,000 PSI (690 BAR) FOOT PUMP, PROVIDES 5 TONS OF CLAMPING FORCE.

- Includes an air control valve for variable speed and safety
- Vise operates vertical or horizontal configurations for project flexibility
- Vise jaws open up to 8" (203 mm) for large holding requirements

Includes

Kit Components	PTPHV859SPX	PTPHV859ASPX
5T Hydraulic Vise	PTPHV859	PTPHV859
Hold-Ets Magnetic Clips	PTHE3	PTHE3
Air/Hydraulic Foot Pump	-	PA6
Gauge	9040	9040
Gauge Adapter	9670	9670
Hose	9758	9758
Female Coupler	9796	9796
Male Coupler	9798	9798

Shop Equip.

MAGNETIC VISE CLIPS

Model Shown:
PTHE3



Features

- Magnetically hold sockets for assembling and disassembling universal joints
- Provides 3" (76 mm) of rigid aluminum construction and superior magnetic locking power to hold screws, rings, c-clips, and springs
- Makes any job a one-man operation with superior strength to hold 5.5 lbs (2.49 kg) vertically and 2.75 lbs (1.24 kg) pounds horizontally
- Can be used as a jaw liner for non-marking material and hold threaded objects rigid without damage to threads

JACKS

SELECT FROM A WIDE RANGE OF LIFTING JACK PRODUCTS AND MAINTENANCE SETS TO COMPLETE YOUR SYSTEM REQUIREMENTS

- A hydraulic jack is a powerful lifting or pushing tool designed to provide effective lift over greater distances than a basic mechanical jack.
- Turnkey maintenance sets offer matched hydraulic system components, adapters and hydraulic spreader, contained in a rugged carrying and storage case.
- Specialty hydraulic jacks support post tension, low height or clearance applications.
- Portable high tonnage jacks are totally self-contained, their modular design allows you to change lifting modules to suit your tonnage or height requirements.



POWERTHON LIFETIME WARRANTY



Section / Series	Page Content	Tonnage Range	Pages
Introduction	Choosing the Right Jack	—	165-166
9	Sidewinder Mini Jacks	5 - 20	167
	Low Profile Bottle Jacks	12, 20 & 30	168
	Portable Hydraulic Power Bottle Jacks	2 - 110	169
	Telescoping Bottle Jacks	6-13	170
J	Economy Toe Jacks	5.5, 11 & 27.5	171
M	Maintenance Sets	2.5 & 10	172
RJ	Portable Railroad Edition Jacks and Accessories	100	173-174
JE / JA	Portable High Tonnage Railroad Jacks and Accessories	55, 100, 150	175-176
SK	10 and 25 Ton Start-Up Kits	10 & 25	177-178
SJ	Post-Tension and Stressing Jacks and Accessories	20 & 30	179-180



SELECTING THE RIGHT JACK:

Step 1: Select the style jack that best suits the application and your intended lift.

Step 2: How much clearance, or open space, is available? What is the minimum height?

Step 3: How much lift, or extension, is required for the load? What is the tonnage needed?

JACK SIZING CONSIDERATIONS:

1. What do you need to lift?

Depending on the vehicle or machine you need to lift, you will require appropriate equipment. You don't lift a 20 ton truck with the same equipment you would use to lift a 2 ton vehicle.

To choose the right fit, first look at the hydraulic jack capacity. Today, on the market, you can find various sizes of hydraulic jacks, with a lifting capacity going from 1 ton to 300 tons, and even more.

2. What is the free space available?

The best jack in the world is useless if you can't place it under the load. Nowadays, application start height is getting lower and lower, requiring a more compact equipment.

Ground clearance is an important parameter to consider, you need to be able to place the jack without damaging the load.

3. What is the maximum lifting height you would need?

To make the best choice, compare the number of strokes and maximum height of each hydraulic jack.

In addition, ask the how many extensions are available with the hydraulic jack. Some of the equipment has 1 or 2 additional extensions, which will cover more applications with the same equipment.



JACK SERIES:

Hydraulic Bottle Jacks

Choose from this complete line of premium quality, standard bottle jacks. Ideal for use in any number of industrial lifting and pushing applications.

Tonnage Range: 2-110



Maintenance Sets

Matched hydraulic system components, adapters and a hydraulic spreader, contained in a rugged carrying and storage case. Portable sets are ideal for pushing, pulling, lifting, straightening, or clamping at remote job sites.

Types: Manual or electric drive maintenance sets

Tonnage Range 10 - 25



Portable High Tonnage Jacks

Totally self-contained, modular design allows you to change lifting modules to suit your tonnage or height requirements.

Tonnage Range: 55 - 300

Model Shown:

9210A, 9220A, 9105A, 9205A



Features

COMPACT SIDEWINDER MINI JACK FITS IN YOUR PALM AND DELIVERS 5, 10 & 20 TONS OF LIFTING FORCE.

- Retracted height of just 2.56" for the smallest jack and 5.13" for the 20 ton, allows you to slip this jack into the narrowest of crevices.
- Jacks operate either horizontally or vertically. Handles function in line with base for easier use in confined spaces.
- The perfect addition to any toolbox, this remarkable little jack has multiple uses that are limited only by your imagination. Use it as a jack, or a spreader. Use it to turn your mechanical gear puller (note: puller capacity must match jack capacity) into a hydraulic puller.
- High strength piston and pump linkage for long life.
- All models include over-travel protection.
- Lever Bar included on all models.
- All jacks meet ASME B30.1 standards and carry the Power Team PowerThon™ Lifetime Warranty.

9105A Sidewinder jack is the ideal choice for straightening this crushed box steel .





Ordering Information

Order Number	Cap. (tons)	Stroke (in.)	Retracted Height (in.)	Max. Height (in.)	No. Pump Strokes to Ext. Piston	Saddle Dia. (in.)	Base Size Dia. (in.)	Pump Handle Length (in.)	Handle Effort at Rated Cap. (lbs.)	Carry Handle	Prod. Wt. (lbs.)
9105A	5	0.75	2.50	3.38	30	1.14	2,91	9.44	57	No	4.20
9205A	5	1.50	3.50	5.13	38	1.14	2.91	9.44	57	No	5.30
9210A	10	1.19	4.75	5.88	36	1.66	4.33	17.33	62	No	12.10
9220A	20	1.19	5.13	6.31	46	2.08	4.72	23.81	77	No	17.60

Model Shown:
9012A, 9020A, 9130A



Features

THE RIGHT CHOICE FOR THOSE LOWER CLEARANCE JOBS OR APPLICATIONS

- All the quality, features and lifting capacity of the standard jacks in short form. The 12 ton and 20 ton models feature screw extensions for added versatility.
- All jacks operate both vertically and horizontally for use in a variety of lifting, pushing and spreading applications.
- Large base area for increased strength and stability during lifting.
- High strength piston and pump linkage for long life.
- All models include over-travel protection.
- Lever Bar included on all models.
- All jacks meet ASME B30.1 standards and carry the Power Team PowerThon™ Lifetime Warranty.

9130A Low Profile Hydraulic Bottle Jack provides the lifting capacity and low height for this underground mining application.



Ordering Information

Order Number	Cap. (tons)	Stroke (in.)	Retracted Height (in.)	Length of Screw Ext. (in.)	Height with Screw Ext. (in.)	No. Pump Strokes to Ext. Piston ‡	Saddle Dia. (in.)	Base Size (in.)	Pump Handle Length (in.)	Handle Effort at Rated Cap. (lbs.)	Carry Handle	Prod. Wt. (lbs.)
9012A	12	3.75	6.75	3	13.50	26	1.88	6.50 x 4.19	23.81	60	Yes	14.00
9020A	20	3.38	7.13	1.56	12.00	22	2.00	7.19 x 5.06	31.50	70	Yes	22.22
9130A	30	3.13	7.13	—	10.25	35	2.38	7.56 x 5.56	39.38	50	Yes	30.20

‡ 2 Speed: Rapid advance≈40 strokes; Lift mode≈160 strokes.

Model Shown:
9030A, 9008A, 9112A



Features

IDEAL FOR INDUSTRIAL LIFTING AND PUSHING APPLICATIONS FOR MRO

- Choose from this complete line of premium quality bottle jacks. Ideal for use in any number of industrial lifting and pushing applications.
- The 9110B, 9015B, 9022B and 9033B feature a beveled base which allows the jack to “follow” the load, reducing the chance of dangerous side-loading.
- Jacks feature a screw extension for quicker setup.
- High strength piston and pump linkage for long life.
- All models include over-travel protection.
- Lever Bar included on all models. All jacks can be used in the vertical, angled or horizontal positions.
- Serrated or contoured saddles help stabilize the load for a safer lift.
- 110 ton jack features dual pumps for time-saving two-speed operation.
- All jacks meet ASME B30.1 standards and carry the Power Team PowerThon™ Lifetime Warranty.

Ordering Information

Order Number	Cap. (tons)	Stroke (in.)	Retracted Height Min. (in.)	Length of Screw Ext. (in.)	Height with Screw Ext. (in.)	No. Pump Strokes to Ext. Piston	Saddle Dia. (in.)	Base Size (in.)	Pump Handle Length (in.)	Handle Effort at Rated Cap. (lbs.)	Carry Handle	Prod. Wt. (lbs.)
9002A	2	4.50	7.13	1.94	13.56	5	1.00	4.69 x 2.56	12.25	75	No	4.80
9003A	3	4.50	7.50	2.38	14.38	10	1.13	4.50 x 2.84	19.25	45	No	5.80
9005A	5	4.75	7.88	2.75	15.38	12	1.38	5.19 x 3.00	21.44	55	No	8.00
9008A	8	4.75	7.88	2.75	15.38	18	1.50	6.00 x 3.50	23.81	75	No	12.1
9112A	12	5.88	9.50	3.13	18.50	26	1.88	6.50 x 4.19	23.81	60	Yes	17.50
9015B	15	6.13	9.06	4.50	19.88	27	2.38	5.13 x 5.50 †	27.56	90	No	18.30
9120A	20	6.25	10.63	3.63	20.50	22	2.00	7.19 x 5.06	31.50	70	Yes	28.50
9022B	22	6.13	9.44	4.31	20.50	36	2.38	6.50 x 6.31 †	27.56	90	Yes	23.60
9030A	30	6.25	11.00	—	17.25	35	2.38	7.56 x 5.56	39.38	50	Yes	41.20
9033B	33	5.63	9.44	4.19	19.75	56	2.56	7.25 x 6.94 †	27.56	88	Yes	32.00
9050A	50	6.75	12.00	—	18.75	36	3.00	9.31 x 7.38	39.38	85	Yes	78.00
9110B	110	6.13	11.81	—	17.94	40/160 ‡	4.38	13.38 x 11.44	27.56	79	Yes	154.30

† Comes with a Beveled Base.

‡ 2 Speed: Rapid advance≈40 strokes; Lift mode≈160 strokes.

Model Shown:
9006X, 9011X, 9013X



Features

THE RIGHT CHOICE FOR THOSE LOWER HEIGHT APPLICATIONS FOR MRO.

- Telescoping jacks offer all of the quality features and capabilities of the standard bottle jack line with a bonus. The super-long stroke of these jacks saves time and effort by eliminating the need to lift or crib. In most applications, the user can place the jack once and complete the lift.
- The 9006X, 9011X and 9013X all feature a unique beveled base that allows the jack to “follow” the load laterally as it is raised, greatly reducing side-loading of the piston.
- High strength piston and pump linkage for long life.
- All models include over-travel protection.
- Lever Bar included on all models.
- All jacks meet ASME B30.1 standards and carry the Power Team PowerThon™ Lifetime Warranty.

Ordering Information

Order Number	Cap. (tons)	Stroke (in.)	Retracted Height (in.)	Length of Screw Ext. (in.)	Height with Screw Ext. (in.)	No. Pump Strokes to Ext. Piston	Saddle Dia. (in.)	Base Size Beveled Base (in.)	Pump Handle Length (in.)	Handle Effort at Rated Cap. (lbs.)	Carry Handle	Prod. Wt. (lbs.)
9006X	6	12.00	8.50	—	20.50	14	1.75	4.75 x 5.25	27.56	79	No	14.00
9011X	11	10.30	7.88	2.69	20.88	25	1.63	6.31 x 6.50	27.56	88	No	19.50
9013X	13	10.00	9.06	3.31	22.44	35	1.88	6.94 x 7.31	27.56	79	Yes	25.00

Model Shown:
J24T, J55T, J106T



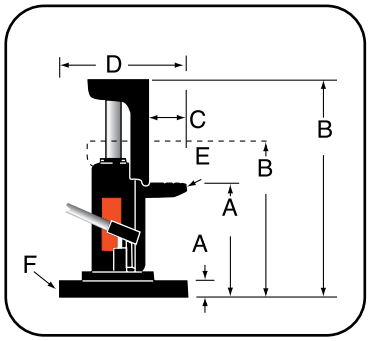

Features

LOW HEIGHT INDUSTRIAL LIFTING AND PUSHING APPLICATIONS.

- These bottle jack-style toe jacks are loaded with many of the same features as our standard bottle jacks, but the toe-lift feature and swiveling pump handle socket make them ideal for machinery lifting and positioning.
- An internal pressure relief provides added safety by limiting the jack's lifting capability to the capacity of the toe.
- Spring return is an added feature on the J55T and J106T jacks.
- Swiveling pump handle assembly available on the 5 and 10 ton models. The swiveling jack assembly allows you to access and pump the unit from numerous positions.
- High strength piston and pump linkage for long life.
- All models include over-travel protection.
- Lever Bar included on all models.
- All jacks meet ASME B30.1 standards and carry the Power Team PowerThon™ Lifetime Warranty.

Technical Dimensions

Order Number	Ret.	Ext.	Ret.	Ext.				
	A		B		C	D	E	F
	(in.)	(in.)	(in.)	(in.)	(in.)	(in.)	(in.)	(in.)
J24T	0.63	5.50	9.25	14.00	1.88	7.13	2.00	4.94
J55T	1.00	5.88	11.50	16.38	1.88	10.13	3.00	7.25
J106T	1.25	7.13	12.88	18.75	2.50	11.50	3.94	9.50

Ordering Information

Order Number	Cap. (tons)	Max. Lift Stroke (in.)	Strokes to Ext. Piston (1 in.)	Handle Effort at Max. Load (lbs.)	Carry Handle	Prod. Wt. (lbs.)
J24T	2	4.75	14	42.00	Yes	18.30
J55T	5	4.88	22	60.00	Yes	53.00
J106T	10	5.88	31	73.00	Yes	83.80

Model Shown:
IM10E, IM10H



NOTE: Actual storage box may differ from photo.

Features

TURNKEY, EXTREMELY VERSATILE MECHANICS MAINTENANCE KIT FITS MANY APPLICATIONS.

- Matched hydraulic system components, adapters and hydraulic spreader, contained in a rugged carrying and storage case.
- Portable sets are ideal for pushing, pulling, lifting, straightening, or clamping at remote job sites.
- Cylinders in set are rated at 10 tons at 10,000 psi. Set components are designed for full rated capacity of cylinders.
- IM10B comes with a battery powered pump, while the IM10E comes with an electric pump. Both come with two 10T cylinders. The IM10P/IM10L each come with a hand pump and one 10T cylinder.

Application Flexibility

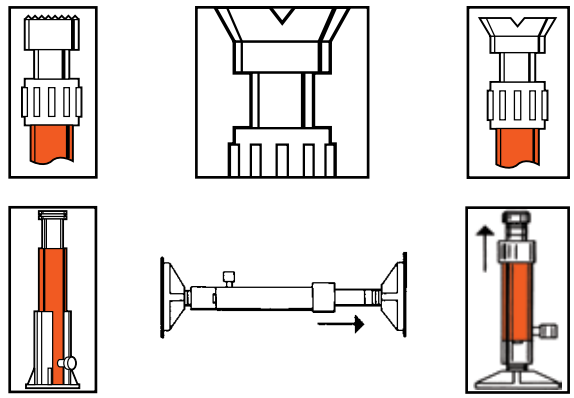

Ordering Information

Order No.	IM10B	IM10E
CONTENTS OF SET	Items Included below	Items Included below
Hydraulic spreader	HS2000	HS2000
Hand pump (electric)	PB102-1	PE102
Hydraulic gauge (10,000 psi)	9041	9041
Tee adapter	9670	9670
Hose & coupler assembly	9754	9754
90° V base	25395	25395
Threaded coupler	25664	25664
Serrated saddle	31772	31772
Flat base	32325	32325
Extension rod - 5" length	350897	350897
Extension rod - 10" length	38909	38909
Extension rod - 18" length	350898	350898
Cylinder support base	420062	420062
Cylinder, 10 ton, 6.13 stroke	C106CBT	C106CBT
Cylinder, 10 ton, 10.13 stroke	C1010CBT	C1010CBT
Storage box	350722	350722
Prod. Weight (lbs.)	106.00	106.00

Order No.	IM10H	IM10L
CONTENTS OF SET	Items Included Below	Items Included Below
Hydraulic spreader	HS2000	HS2000
Hand pump	P59	P59L
Hydraulic gauge (10,000 psi)	9041	9041
Tee adapter	9670	9670
Hose & coupler assembly	9754	9754
90° V base	25395	25395
Threaded coupler	25664	25664
Serrated saddle	31772	31772
Flat base	32325	32325
Extension rod - 5" length	350897	350897
Extension rod - 10" length	38909	32890
Extension rod - 18" length	350898	350898
Cylinder support base	420062	420062
Cylinder, 10 ton, 6.13 stroke	C106CBT	C106CBT
Storage box	350722	350722
Prod. Weight (lbs.)	89.00	81.00

Model Shown:
RJ100T24E

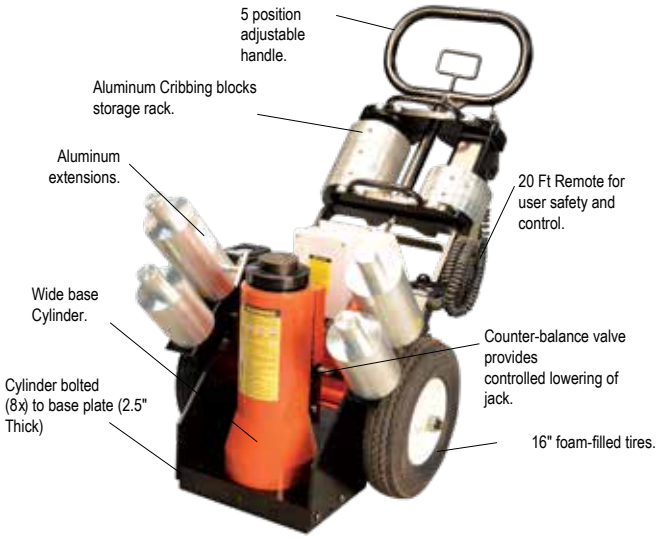

Features

HEAVY-DUTY SELF-CONTAINED INDUSTRIAL LIFTING JACK FOR RAIL MAINTENANCE.

- Wide base cylinder design for stability.
- Double-acting cylinder with locking collar.
- The bottom of the cylinder is a bolted joint, using the base plate as part of the cylinder. This will allow for service of even the oldest or most abused jacks.
- Cribbing storage rack location is such that it allows easy access during cribbing placement and removal.
- Jack has a 20 ft. remote pendant for user safety and control.
- Easy to maneuver, large tires and small footprint make it easy to get into tight spaces.
- Adjustable handle, allows the user to easily to position the jack under loads.

Technical Specifications

Type of Pump	Low Pressure Pump		High Pressure Pump		Current Draw at Max. Internal Relief Settings	Unload Pressure	Internal Relief Pressure	Tank	Valving
	Flow (cu. in. / min.)	Pressure (psi.)	Flow (cu. in. / min.)	Pressure (psi.)	(amps)	(psi.)	(psi.)	(gal.)	
Electric	440	440	48	10,000	25	540 - 780	10,000	2	4-Way / 3-Pos. Tandem Center Manual
Air	330		30		NA				

Ordering Information

Order Number	Description	Stroke (in.)	Retracted Height A (1 in.)
RJ100T24E	Jack, 100 Ton RR 24" Ret, Elect	14	24
RJ100T37E	Jack, 100 Ton RR 37" Ret, Elect	27	37
RJ100T24A	Jack, 100 Ton RR 24" Ret Air	14	24
RJ100T37A	Jack, 100 Ton RR 37" Ret Air	27	37
RJ100T24A-C*	Jack, 100 Ton RR 24" Ret Air w/Crib Block	14	24
RJ100T24E-C*	Jack, 100 Ton RR 24" Ret Elect w/Crib Block	14	24
RJ100T37A-C*	Jack, 100 Ton RR 37" Ret Air w/Crib Block	27	37
RJ100T37E-C*	Jack, 100 Ton RR 37" Ret Elect w/Crib Block	27	37
RJ100T24A-E**	Jack, 100 Ton RR 24" Ret Air w/Ext	14	24
RJ100T24E-E**	Jack, 100 Ton RR 24" Ret Elect w/Ext	14	24
RJ100T37A-E†	Jack, 100 Ton RR 37" Ret Air w/Ext	27	37
RJ100T37E-E†	Jack, 100 Ton RR 37" Ret Elect w/Ext	27	37

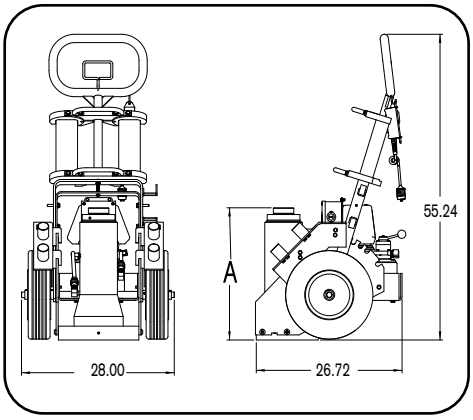

* C models include RJ-CB-S crib set
** 24"– E models include RJ-EXT-S1 set
† Shipping weights 37"– E version includes RJ-EXT-S set

Jacks

EXTENSIONS



Order No.	Description
RJ-EXT18	Assembly, Extension 18 in. 100 Ton RR Jack
RJ-EXT14	Assembly, Extension 14 in. 100 Ton RR Jack
RJ-EXT11	Assembly, Extension 11 in. 100 Ton RR Jack
RJ-EXT9	Assembly, Extension 9 in. 100 Ton RR Jack
RJ-EXT7	Assembly, Extension 7 in. 100 Ton RR Jack
RJ-EXT5	Assembly, Extension 5 in. 100 Ton RR Jack
RJ-EXT-S	Set, Extensions 100 Ton RR Jack 5, 7, 9
RJ-EXT-S1	Set, Extensions 100 Ton RR Jack 5, 11, 18

CRIBBING BLOCKS



Order No.	Description
RJ-CB10	Assembly, Crib Block 10 in. 100 Ton RR Jack
RJ-CB5	Assembly, Crib Block 5 in. 100 Ton RR Jack
RJ-CB3	Assembly, Crib Block 3 in. 100 Ton RR Jack
RJ-CB1	Assembly, Crib Block 1 in. 100 Ton RR Jack
RJ-CB-S	Set, Crib Blocks 100 Ton RR Jack 1, 3, 5, 10

SPACERS



Order No.	Description
RJ-SP-1	Spacer, 1 in.
RJ-SP-2	Spacer, 2 in.
RJ-SP-3	Spacer, 3 in.
RJ-SP-S	Spacer Set 100 ton RR Jack 1, 2, 3

SWIVEL CAPS



Order No.	Description
RJ-SC-1	Assembly, Swivel Cap 100 Ton RR Jack
RJ-SC-2	Assembly, Swivel Cap 100 Ton RR Jack Long

Model Shown:

JEM5526,PMA55S,PME55S



Air pump and cart module.



Electric pump and cart module.

Features

PORTABLE AND COMPACT, IDEAL FOR LOCOMOTIVE/RAIL CAR, MINING AND HEAVY EQUIPMENT MAINTENANCE.

- Modular design allows you to change lifting modules to suit your tonnage or height requirements.
- Select the collapsed height to fit your most frequent application and add jacking modules to suit your needs.
- Exclusive load control system provides positive, chatter-free control when lowering the load.
- Remote operation for maximum operator safety and control, motor or/an valve options.
- Easy to maneuver with large tires and small “footprint” make it easy to scoot into the tightest quarters.
- Adjustable, heavy-duty handle makes this jack easy to move, position under vehicles.
- Shielded and sheltered hydraulic lines for safer, longer, trouble-free service.







JACK MODULE EXTENSION

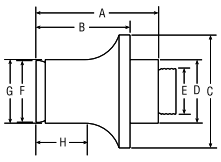

Order Number	Cap. (tons)	A (in.)	B (in.)	C (in.)	D (in.)	E (in.)	F (in.)	G (in.)	H (in.)	Prod. Wt. (lbs.)
58945	55	8.81	6.81	5.00	2.63	1 11/18-8UNC	2.50	2.63	3.63	21.00
58943	100	9.00	7.00	6.88	3.88	2 3/4-12UNC	3.75	3.88	3.75	40.00
58944	150	8.63	6.63	8.00	4.50	3 1/4-8UNC	4.38	4.50	3.50	50.00

CRIBBING BLOCK SETS - INCLUDES ONE JACK MODULE EXTENSION



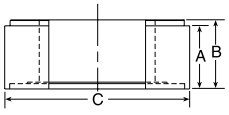

- Convert jack module into stable mechanical cribbing device.
- Increases total stack height up to 20.50".

Order Number	No. in Set	Cap. (ton)	A (in.)	B (in.)	C (in.)	Jack Module Ext. (in.)	Total Stack Height (in.)	Prod. Weight. (lbs.)
CBS55	1	55	1.50	1.75	5.50	6.81	20.31	36.00
	4		3.00	3.25				
CBS100	1	100	1.50	1.75	7.38	7.00	20.50	68.00
	4		3.00	3.25				
CBS150	1	150	1.50	1.75	8.75	6.63	20.13	85.00
	4		3.00	3.25				
CBS200	1	200	1.50	1.75	10.00	6.63	20.13	105.00
	4		3.00	3.25				

Pump Module, include Remote Pendant

Pump	Motor Only	Motor & Valve
Air	PMA55	PMA55S
Electric	PME55	PME55S

Jack Modules

Tonnage	Cylinder Stroke	Collapsed Height		
		26"	33"	45"
55	13.13	JM25	JM35	JM45
100	13.13	JM210	JM310	JM410
150	18.13	JM215 †	JM315	JM415
200	18.13	JM220 *	JM320	JM420
300	13.13	Contact Factory		

* Collapsed height; 28" and stroke 13.13"

† Stroke 13.13".

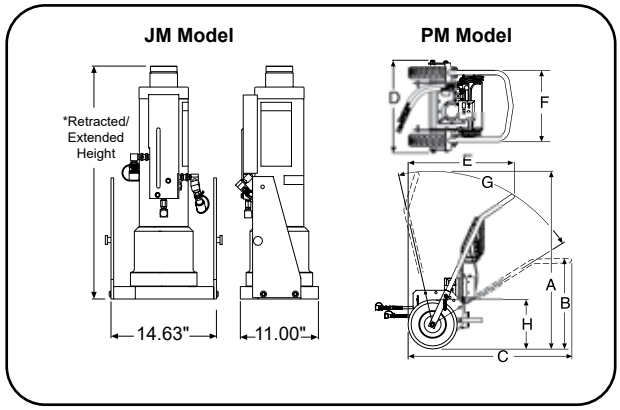

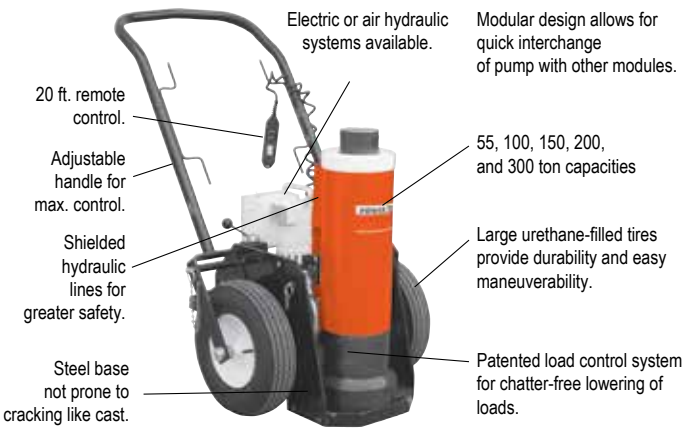

PUMP & CART MODULES

Pump and cart modules contain hydraulic pump, cart, remote control and all hoses and fittings required to connect to a jack module.

JACK MODULES

Jack modules easily separate from the pump and cart module.



26" Jack Module **33" Jack Module** **45" Jack Module**

Jacks

Technical Dimensions

Model Series	A	B	C	D	E	F	G *	H
	(in.)	(in.)	(in.)	(in.)	(in.)	(in.)	(deg.)	(in.)
PMA PME	57.88	29.62	53.25	30.00	34.31	23.38	70°	16" Tire Dia.

* Total range with varying degree increments.

Ordering Information - Complete with Pump and Jack Modules, Fully Assembled

Order Number	Cap. (tons)	Retracted Height (in.)	Extended Height (in.)	Stroke (in.)	Pump Type	Power Required	Valve Type	Remote Control
JEM5526	55	26.00	39.13	13.13	Electric	25 amps	Manual	Motor Only
JAM10033	100	33.00	46.13	13.13	Air	50 CFM @ 80 ps	Manual	Motor Only
JAR10033	100	33.00	46.13	13.13	Air	50 CFM @ 80 psi	Air Pilot	Motor & Valve
JEM15026	150	26.00	39.13	13.13	Electric	25 amps	Manual	Motor Only
JAM15033	150	33.00	46.13	13.13	Air	50 CFM @ 80 psi	Manual	Motor Only

Model Shown:
SK10T



Features

VERSATILE 10 TON MAINTENANCE KIT CONVENIENTLY PACKAGED IN A BOX.

- 10 ton Start-Up Kit covers a range of lifting, shifting, and positioning needs
- Broad range of cylinder types and strokes to fit many applications
- Neatly packaged in a durable, molded storage case to securely house your equipment and is ready to use upon opening
- SK10TE kit is CE Compliant

Storage Case Dimensions



Plastic Molded Case, 31.5"(L) x 20.5"(H) x 11.5"(W).

Ordering Information

Order No		Kit Contents			
SK10T	SK10TE	Hand Pump	Usable Oil Cap. (in^3.)	Volume Per Stroke Low / High Press. (in^3.)	Weight (lbs.)
X	X	P19L	27	0.25 / 0.05	5.10
		Gauge	Type	Primary Units	Face Diameter (in.)
X		9040	analog	psi	2.50
		Hose	Length (ft.)	Burst Rating	I.D. (in.)
X		9754	6.00	2:1	1/4
		Cylinders	Capacity* Short Tons	Stroke (in.)	Collapsed Height (in.)
X	X	C106C	10	6.00	9.75
X	X	RSS101	10	1.00	3.50
X	X	RH123	12	3.00	7.25
X	X	RLS100	10	0.44	1.75
		Spreader	Min. Clearance (in.)	Max Spread (in.)	Weight (lbs.)
X	X	HS2000	0.56	4.00	4.80
		Case	Material	L x H x W (in).	Weight w/o Product (lbs.)
X	X	2008632	Heavy-Duty Plastic	31.5 x 20.5 x 11.5	12.70

* Values shown in short tons (2,000 lb). To convert to long tons, multiply by 0.893. To convert to metric tons, multiply by 0.907.

Model Shown:
SK25T



NOTE: Storage cases are not included with the 25 ton startup kits, they must be ordered separately.

Features

THE RIGHT CHOICE FOR THOSE HIGHER TON MAINTENANCE KIT NEEDS.

- 25 Ton Start-Up Kit covers a range of lifting, shifting, and positioning needs
- Broad range of cylinder types and strokes to fit many applications
- SK25TE kit is CE Compliant

Optional 25 Ton Storage Cases

MB5

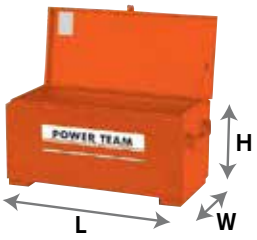

308435OR9

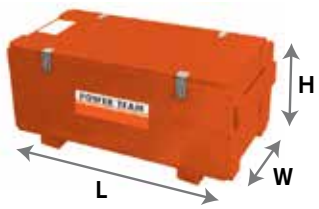

Order No.	Description
MB5	Metal Box Construction, 32" (L) x 19" (W) x 14" (H)
308435OR9	Wooden Box Construction, 36" (L) x 17.5" (W) x 14" (H)

Ordering Information

Order No		Kit Contents			
SK25T	SK25TE	Hand Pump	Usable Oil Cap. (in^3.)	Volume Per Stroke Low / High Press. (in^3.)	Weight (lbs.)
X	X	P59L	66	0.72 / 0.15	8.90
		Gauge	Type	Primary Units	Face Diameter (in.)
X		9040	analog	psi	2.50
		Hose	Length (ft.)	Burst Rating	I.D. (in.)
X		9754	6.00	2:1	1/4
		Cylinders	Capacity* Short Tons	Stroke (in.)	Collapsed Height (in.)
X	X	C256C	25	6.00	10.75
X	X	RSS302	30	2.00	4.63
X	X	RH302	30	2.00	6.25
X	X	RLS300	30	0.50	2.31
		Spreader	Min. Clearance (in.)	Max Spread (in.)	Weight (lbs.)
X	X	HS2000	0.56	4.00	4.80

* Values shown in short tons (2,000 lb). To convert to long tons, multiply by 0.893. To convert to metric tons, multiply by 0.907.

Model Shown:
SJ2010, SJ3010



Features

ONE OF THE MOST DURABLE MONO-STRAND JACKS IN THE INDUSTRY.

- Ideally suited for work on slab-on-grade where dirt, heat and high volume use take their toll.
- Available in single or double-acting models.
- Standard single-acting units have a 10” stroke.
- Standard double-acting units have an 8.5" stroke.
- Service repair is simple and components are long lasting and easily replaced.
- 3" detachable seater nose assembly easily replaced with optional 6" nose assembly.
- The jack of choice for high-rise and elevated work, thanks to fast return time and light weight.
- All hydraulic fluid controls are internal for more efficient and safer operation during tensioning and retraction.

Optional Dead-end Seater

Dead-end seaters for production work and field work available on special order. (Part #400120)

Multi-strand post-tensioning application.



Technical Dimensions

Order No.	A (in.)	B (in.)	C (in.)	Wt. (lbs.)
SJ2010	21.00	9.00	6.50	55.00
SJ2010	22.00	10.20	7.00	76.00
SJ3010	22.00	10.20	7.00	76.00
SJ3010P	22.00	13.20	7.00	76.00
SJ2010DA	18.50	7.50	6.50	42.00
SJ3010DA	18.50	8.50	6.50	52.00

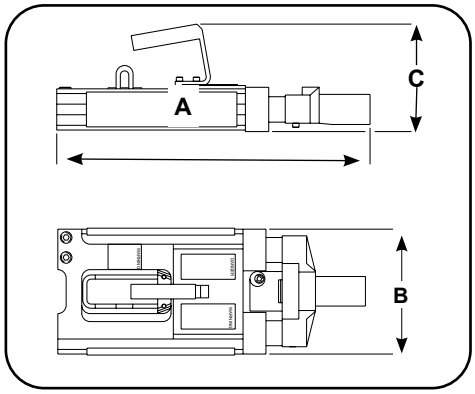

Ordering Information

Order Number	Cap. (tons)	Stroke (in.)	Oil Cap. (cu. in.)	Strand Dia. (in.)	Seater Type (in.)	Int. Press. at Cap. (in.)	Tons at 10,000 psi	Description	Recommended Pumps for this Stressing Jack	Prod. Wt. (lbs.)
SJ2010	20	10.00	45.2	0.375 - 0.50	Spring	8,948	22.4	Post-tension jack with spring, seater 0.50" strand.	PE554P/PE604T	55.00
SJ2010P	20	10.00	45.2	0.375 - 0.50	Power*	8,948	22.4	Post-tension jack with power seater, 0.50" strand.	PE554PT/PE604PT	55.00
SJ2010DA	20	8.50	53.0	0.375 - 0.50	Power*	6,500	31.4	Double-acting post-tension jack with power seater, 0.50" strand.	PE554PT/PE604PT	42.00
SJ3010	30	10.00	63.6	0.375 - 0.60	Spring	9,549	31.4	Post-tension jack with spring seater, 0.60" strand.	PE554P/PE604T	76.00
SJ3010P	30	10.00	63.6	0.375 - 0.60	Power*	9,549	31.4	Post-tension jack with power seater, 0.60" strand.	PE554PT/PE604PT	76.00
SJ3010DA	30	8.50	67.6	0.375 - 0.60	Power*	7,554	39.7	Double-acting post-tension jack with power seater, 0.60" strand.	PE554PT/PE604PT	52.00

*Options with Power Seaters require an additional hose to connect the Power Seater to the valve.

Jacks

STRESSING JACK ACCESSORIES AND HOSES

Used with Stressing Jack	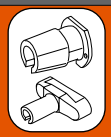 3" Nose Piece #	 3" Wedge Seater #	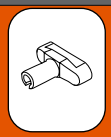 6" Nose Piece	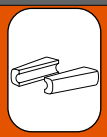 6" Wedge Seater #	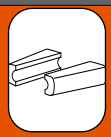 3/8" Dia. Gripper Set #	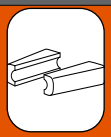 7/16" Dia. Gripper Set #	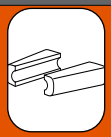 1/2" Gripper Set #	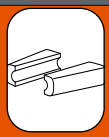 19/32" Gripper Set #	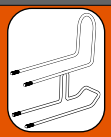 Replacement Gripper Handle #	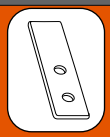 Gripper Retainer Plate # (2 used)
SJ2010	252564	252562	252759	252763	252568	252761	252567	NA	252570	252565
SJ2010P	252564	252562	252759	252763	252568	252761	252567	NA	252570	252565
SJ2010DA	252543	252542	252760	252764	252650	252762	252555	NA	252556	252544
SJ3010	252564	252562	252759	252763	252568	252761	252567	252569	252570	252565
SJ3010P	252564	252562	252759	252763	252568	252761	252567	252569	252570	252565
SJ3010DA	253363	253361	253364	253362	253390	NA	253391	253365	252556	252544

Return to Top

HYDRAULIC & MECHANICAL TOOLS

SELECT FROM A WIDE RANGE OF HYDRAULIC & MECHANICAL TOOLS TO COMPLETE YOUR SYSTEM REQUIREMENTS

- Full range of torque wrenches, low clearance in-line drives and pumps for your bolting applications.
- Specialty tools include nut splitters, spreaders, bead breakers and pipe flange tools.
- Hydraulic clamps for those unique applications requiring higher forces
- Hydraulic testers and accessories to monitor hydraulic circuits
- Wide selection of mechanical tools, such as pliers, pry bars, O-ring picks, thread chasers and more.





POWERTHON LIFETIME WARRANTY



Section / Series	Page Description	Page(s)
TWHC, TWLC, TWSL	High Cycle Torque Wrench, Low Clearance Torque Wrench, SlimLine Torque Wrench	187-190 195-199 201-202
FCV	Flow Control Valve	203
NRP Series	Pneumatic Torque Tools	205-206
PE55 TWP	Electric Hydraulic Torque Wrench Pump	206
RWP55	Air Hydraulic Torque Wrench Pump	207
HNS	Hydraulic Nut Splitter	208
FLS	Hydraulic Flange Spreader	209-210
HFS	Pipe Flange, Hydraulic Spreader	211
HS	Hydraulic Spreaders	212
CC	Hydraulic C-Clamps & Accessories	213
HP35	Hydraulic Punches and Accessories	215-216
HT	Hydraulic Testers and Accessories	217-219
PLIERS	Retaining Ring Pliers (Internal & External)	220
HAND TOOLS	Wrenches, Pry Bars, Spanners & Jimmy Bars	221
SERVICE TOOLS	Pipe Sealant, O-Ring Seal Picks, Thread Chaser, and Magnetic Pick-Up	222

Model Shown:
TWHC3



Features

QUALITY MEANS LOWER COST OF OWNERSHIP

- Designed for high cycle life (2-3x more than existing technology)
- Increased reliability provided by simple drive assembly means less downtime
- Corrosion resistant material for use in harsh environments

ENHANCED USABILITY:

- Compact nose radius allows the tool to fit in tighter, hard-to-reach spaces
- Low weight, high strength design
- Fast operation, long stroke and optimum flow
- Multi-direction high flow swivel manifold

DESIGNED WITH SAFETY IN MIND:

- Fully-enclosed drive mechanism for operator safety
- Swivel manifold internal relief valve prevents retract side over-pressurization
- Fine tooth pawl prevents tool ‘lock-on’

HANDLES SOLD SEPARATELY



The tool’s designed long-stroke mechanism imparts a minimum 30 degree nut rotation per stroke while maintaining a tight and compact nose radius. This is a clear advantage over the short stroke and back-up pawl mechanisms of light alloy competitive models. Fewer parts and reduced torsion in operation equals reduced wear, maintenance and associated costs.

Tools

The TWSD50 is th perfect choice in this power generation application.



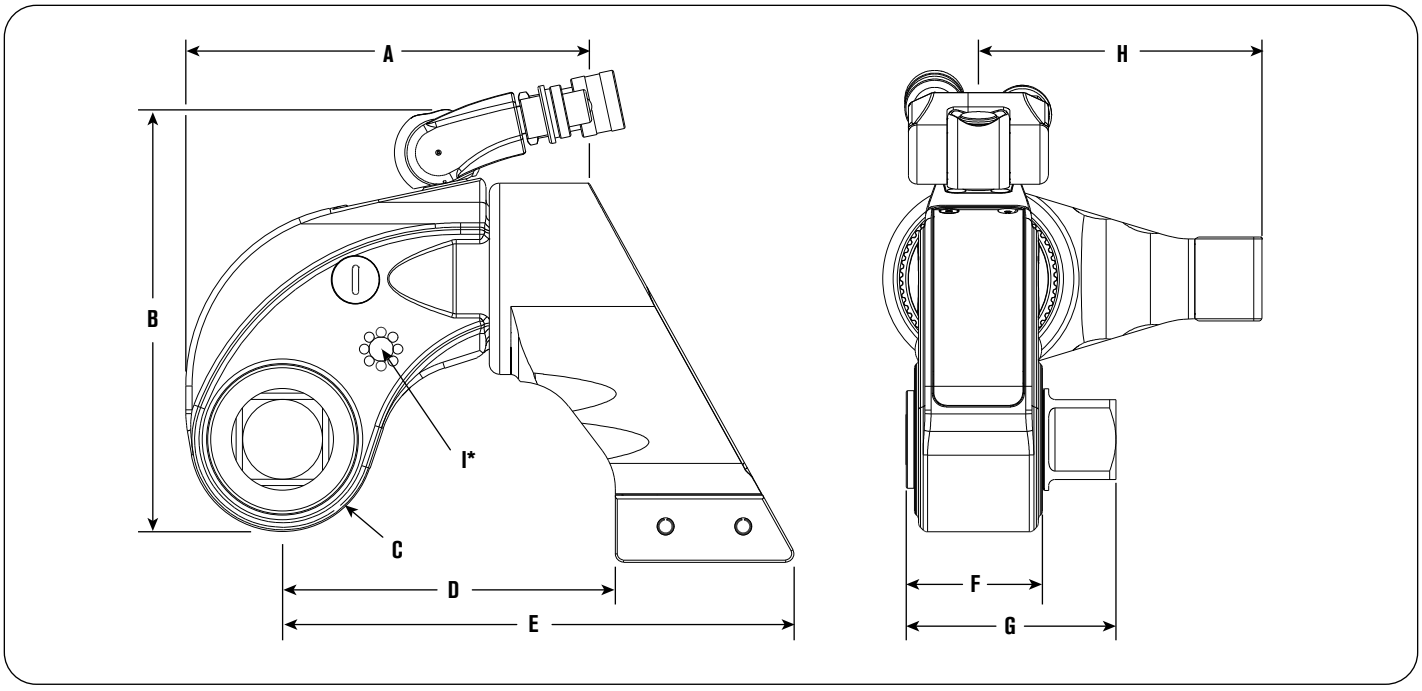

* Dimension I shows thread size (on both sides of the tool) for safety handle or lifting point. TWHC50 model available with lifting points only.

Technical Dimensions

Tool Model	Min Torque lb-ft	Max Torque lb-ft	Square Drive (in)	A (in.)	B (in.)	C (in.)	D (in.)	E (in.)	F (in.)	G (in.)	H (in.)	I	Prod. Wt. (lb)
TWHC1	170	1,413	3/4	5.2	5.71	1.1	4.39	6.69	1.56	2.67	3.39	M6 x 1.0	6.2
TWHC3	376	3,136	1	6.5	6.83	1.44	5.1	7.78	2.09	3.3	4.14	M6 x 1.0	11.7
TWHC6	726	6,050	1 1/2	7.56	7.94	1.73	6.24	9.59	2.4	3.93	5.32	M8 x 1.25	19.4

Ordering Information

Order No.	Description
TWHC1	Wrench
TWHC3	Wrench
TWHC6	Wrench

Order No.	Description
TWHC1H	Wrench with Handle
TWHC3H	Wrench with Handle

Order No.	Description
DFTAS000001	Handle for TWHC1
DFTAS000001	Handle for TWHC3

TWHC EXTENDED REACTION ARM TWHC-ERA



Features

- Long reach version of TWHC standard reaction arm
- 3 standard sizes per model (0.98 in./1.97 in./2.95 in.), specials upon request
- Replaces standard reaction arm via quick release locking pin
- Steel alloy construction
- 360° rotation
- Available for full range of tool sizes

Ordering Information

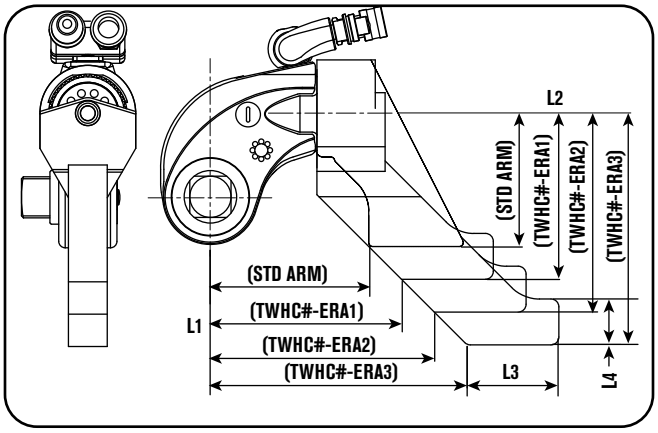

Tool Ref	Order No.	L1 (in.)	L2 (in.)	L3 (in.)	L4 (in.)
STD ARM		4.41	3.39	—	—
TWHC1	TWHC1-ERA1	5.39	4.37	2.36	1.18
	TWHC1-ERA2	6.38	5.35		
	TWHC1-ERA3	7.36	6.34		
STD ARM		5.12	4.13	—	—
TWHC3	TWHC3-ERA1	6.10	5.12	2.76	1.38
	TWHC3-ERA2	7.09	6.10		
	TWHC3-ERA3	8.07	7.09		
STD ARM		6.23	5.35	—	—
TWHC6	TWHC6-ERA1	7.24	6.34	3.74	1.57
	TWHC6-ERA2	8.23	7.32		
	TWHC6-ERA3	9.21	8.31		

TW HANDLE



Features

- Robust steel construction with ribbed polymer grip
- Multi-position on tool for balanced handling
- Cap-screw locking with positive ‘docking’
- Is suitable for all wrench models (TWHC, TWSD, TWLC). However, for larger sizes (TWSD25/TWLC 30/ TWHC50) we recommend the use of eye-bolt lifting.

Ordering Information

Order No.	Description	Tool Ref
DFTAS000001	Wrench Handle	TWSD1
		TWSD3
		TWHC1
		TWHC3
		TWLC2

Order No.	Description	Tool Ref
DFTAS000002	Wrench Handle	TWSD6
		TWSD11
		TWHC6
		TWLC4
		TWLC8
		TWLC15

TWHC REACTION PAD TWHC-RP



Features

- In-Line Reaction Pad for TWHC wrenches used as simple pad, or modified platform for specific application (Machine-able/Weld-able platform)
- Replaces standard reaction arm via quick release locking pin
- Steel alloy construction
- 360° rotation
- Available for full range of tool sizes

Ordering Information

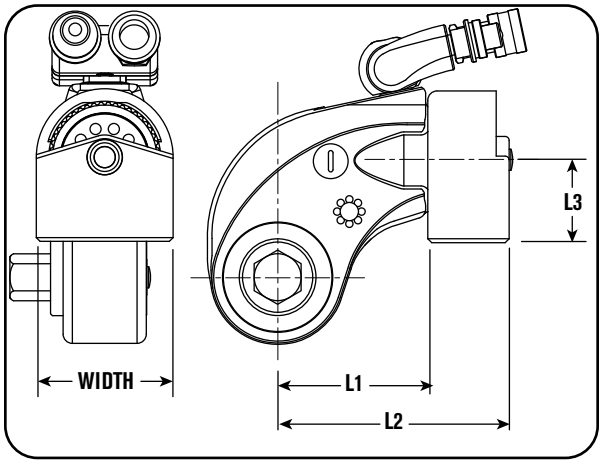

Tool Ref	Order No.	L1 (in.)	L2 (in.)	L3 (in.)	Width (in.)
TWHC1	TWHC1-RP	2.835	4.567	1.93	2.52
TWHC3	TWHC3-RP	3.39	5.43	2.17	2.99
TWHC6	TWHC6-RP	3.90	6.38	2.44	3.50

TWHC LONG REACTION ARM TWHC-LRA



Features

- Tubular extension arm for TWHC wrenches for in-line reaction outside wrench profile
- Replaces standard reaction arm via quick release pin locking
- Steel/light alloy construction (reaction flat machined on tube end)
- Can be cut down to suit specific length
- Available for full range of tool sizes

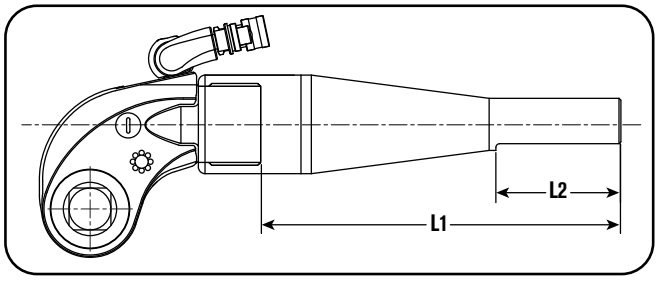

Ordering Information

Tool Ref	Order No.	L1 (in.)	L2 (in.)
TWHC1	TWHC1-LRA	19.72	6.00
TWHC3	TWHC3-LRA		
TWHC6	TWHC6-LRA		

Model Shown:
TWHC20



Features

QUALITY MEANS LOWER COST OF OWNERSHIP

- Designed for high cycle life (2-3x more than existing technology)
- Increased reliability provided by simple drive assembly means less downtime
- Corrosion resistant material for use in harsh environments

ENHANCED USABILITY:

- Compact nose radius allows the tool to fit in tighter, hard-to-reach spaces
- Low weight, high strength design
- Fast operation, long stroke and optimum flow
- Multi-direction high flow swivel manifold

DESIGNED WITH SAFETY IN MIND:

- Fully-enclosed drive mechanism for operator safety
- Swivel manifold internal relief valve prevents retract side over-pressurization
- Fine tooth pawl prevents tool 'lock-on'

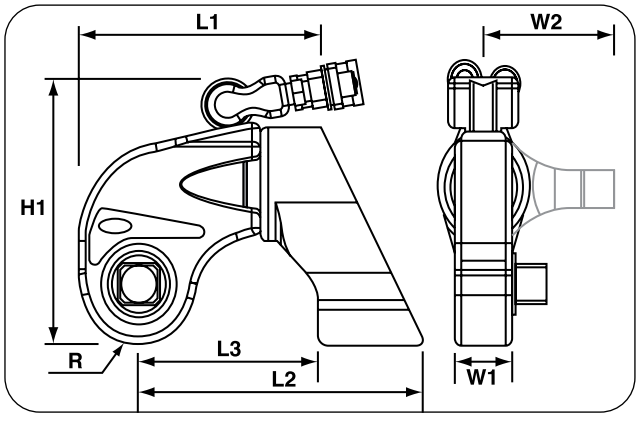

The TWHC11 is th perfect choice with a large reaction surface to eliminate damage to the gears during the tightening process.



Technical Dimensions

Tool Model	Min. Torque lb-ft	Max. Torque lb-ft	Square Drive (in)	A (in.)	B (in.)	C (in.)	D (in.)	E (in.)	F (in.)	G (in.)	H (in.)	I	Wt. (lb)
TWHC11	1336	11,134	1 1/2	9.09	9.18	2.07	7.34	11.81	3.39	5.12	8.16	M8 x 1.25	34.9
TWHC20	2439	20,325	2 1/2	11.01	12.21	2.52	8.65	14.34	3.68	6.10	8.35	M12 x 1.75	60.8
TWHC35	3890	32,418	2 1/2	13.40	13.61	3.05	9.90	16.73	4.74	7.15	8.97	M12 x 1.75	102
TWHC50	6360	53,000	2 1/2	15.93	14.04	3.46	10.49	17.58	4.53	7.57	10.16	M12 x 1.75	152

Ordering Information

Order No.	Description
TWHC11	Wrench
TWHC20	Wrench

Order No.	Description
TWHC35	Wrench
TWHC50	Wrench

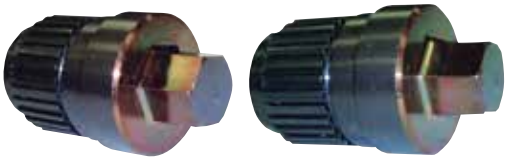

Ordering Information

SQUARE DRIVE - ADAPTERS & SOCKETS

Torque Wrench	Hexagon Drive Size AF (in.)	Order No.	
		TWSD	TWHC
(TWHC1)	0.63	TWD1-063	TWHCHD01-063
	0.75	TWD1-075	TWHCHD01-075
	0.88	TWD1-088	TWHCHD01-088
	1.00	TWD1-100	TWHCHD01-100
(TWHC3)	0.63	TWD3-063	TWHCHD03-063
	0.75	TWD3-075	TWHCHD03-075
	0.88	TWD3-088	TWHCHD03-088
	1.00	TWD3-100	TWHCHD03-100
	1.13	TWD3-113	TWHCHD03-113
	1.25	TWD3-125	TWHCHD03-125
	1.38	TWD3-138	TWHCHD03-138
	1.50	TWD3-150	TWHCHD03-150
	1.63	TWD3-163	TWHCHD03-163
(TWHC6)	0.88	TWD6-063	TWHCHD06-063
	0.75	TWD6-075	TWHCHD06-075
	0.88	TWD6-088	TWHCHD06-088
	1.00	TWD6-100	TWHCHD06-100
	1.13	TWD6-113	TWHCHD06-113

Torque Wrench	Hexagon Drive Size AF (in.)	Order No.	
		TWSD	TWHC
(TWHC6)	1.25	TWD6-125	TWHCHD06-125
	1.38	TWD6-138	TWHCHD06-138
	1.50	TWD6-150	TWHCHD06-150
	1.63	TWD6-163	TWHCHD06-163
(TWSD11)	1.13	TWD11-113	-
	1.25	TWD11-125	-
	1.38	TWD11-138	-
	1.50	TWD11-150	-
	1.63	TWD11-163	-
	1.75	TWD11-175	-
(TWSD25)	1.50	TWD25-150	-
	1.63	TWD25-163	-
	1.75	TWD25-175	-
	1.88	TWD25-188	-
	2.00	TWD25-200	-
	2.25	TWD25-225	-
	2.50	TWD25-250	-
	2.75	TWD25-275	-



Ordering Information

SQUARE DRIVE - IMPACT SOCKETS

Socket Size (in.)	0.75" Drive Part No.	1.00" Drive Part No.	1.50" Drive Part No.	2.50" Drive Part No.
0.88	TWSIA088	TWSIB088	—	—
1.06	TWSIA106	TWSIB106	—	—
1.25	TWSIA125	TWSIB125	—	—
1.38	TWSIA138	TWSIB138	—	—
1.44	TWSIA144	TWSIB144	—	—
1.63	TWSIA163	TWSIB163	TWSIC163	—
1.81	TWSIA181	TWSIB181	-	—
2.00	TWSIA200	TWSIB200	TWSIC200	—
2.19	TWSIA219	TWSIB219	TWSIC219	—
2.38	TWSIA238	TWSIB238	TWSIC238	—
2.56	—	TWSIB256	TWSIC256	—
2.75	—	TWSIB275	TWSIC275	—
2.94	—	TWSIB294	TWSIC294	—

Socket Size (in.)	0.75" Drive Part No.	1.00" Drive Part No.	1.50" Drive Part No.	2.50" Drive Part No.
3.13	—	TWSIB313	TWSIC313	TWSIF313
3.38	—	TWSIB338	TWSIC338	TWSIF338
3.50	—	TWSIB350	TWSIC350	TWSIF350
3.75	—	TWSIB375	TWSIC375	TWSIF375
3.88	—	TWSIB388	—	TWSIF388
4.13	—	TWSIB413	TWSIC413	TWSIF413
4.25	—	TWSIB425	TWSIC425	TWSIF425
4.63	—	—	TWSIC463	TWSIF463
5.00	—	—	—	TWSIF500
5.38	—	—	—	TWSIF538
5.75	—	—	—	TWSIF575
6.13	—	—	—	TWSIF613

Note: For Long Reach (Extended Length) sockets add "LR" to the end of the part number. For 12 point (bi-hex) sockets, add "BH" to the end of the part number.

TWHC EXTENDED REACTION ARM TWHC-ERA



Features

- Long reach version of TWHC standard reaction arm
- 3 standard sizes per model (0.98 in./1.97 in./2.95 in.), specials upon request
- Replaces standard reaction arm via quick release locking pin
- Steel alloy construction
- 360° rotation
- Available for full range of tool sizes

Ordering Information

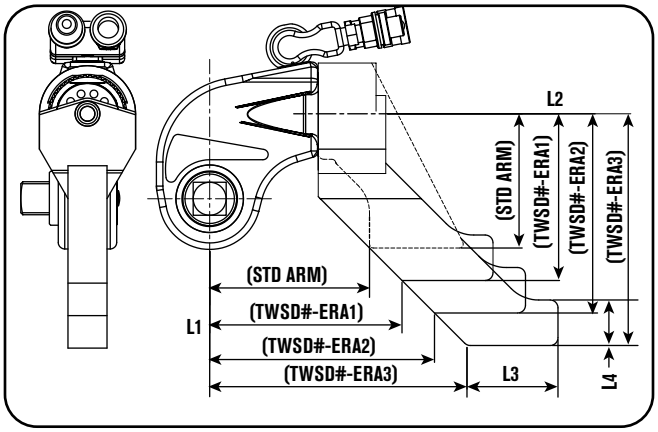

Tool Ref	Order No.	L1 (in.)	L2 (in.)	L3 (in.)	L4 (in.)
STD ARM		4.41	3.39		
TWSD1	TWHC1-ERA1	5.39	4.37	2.36	1.18
	TWHC1-ERA2	6.38	5.35		
	TWHC1-ERA3	7.36	6.34		
STD ARM		4.88	4.13		
TWSD3	TWHC3-ERA1	5.87	5.12	2.76	1.38
	TWHC3-ERA2	6.85	6.10		
	TWHC-ERA3	7.83	7.09		
STD ARM		5.59	5.35		
TWSD6	TWHC6-ERA1	6.57	6.34	3.74	1.57
	TWHC6-ERA2	7.56	7.32		
	TWHC6-ERA3	8.54	8.31		
STD ARM		7.05	6.5		
TWSD11	TWHC11-ERA1	8.03	7.48	4.33	1.57
	TWHC11-ERA2	9.02	8.46		
	TWHC11-ERA3	10	9.45		

TW HANDLE



Features

- Robust steel construction with ribbed polymer grip
- Multi-position on tool for balanced handling
- Cap-screw locking with positive ‘docking’
- Is suitable for all wrench models (TWHC, TWLC). However, for larger sizes we recommend the use of eye-bolt lifting.

Ordering Information

Order No.	Description	Tool Ref
DFTAS000001	Wrench Handle	TWHC1
		TWHC3
		TWLC2

Order No.	Description	Tool Ref
DFTAS000002	Wrench Handle	TWHC6
		TWHC11
		TWLC4
		TWLC8
		TWLC15

TWHC REACTION PAD TWSD-RP



Features

- Wrench In-Line Reaction Pad for TWHC wrenches used as simple pad, or modified platform, for specific application (Machine-able/Weld-able platform)
- Replaces standard reaction arm via quick release locking pin
- Steel alloy construction
- 360° rotation
- Available for full range of tool sizes

Ordering Information

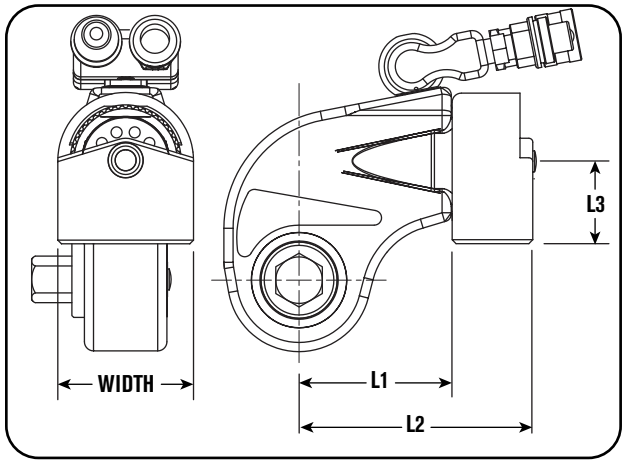

Tool Ref	Order No.	L1 (in.)	L2 (in.)	L3 (in.)	Width (in.)
TWHC11	TWHC11	4.311	7.264	2.579	4.133

TWHC LONG REACTION ARM TWHC-LRA



Features

- Tubular extension arm for TWHC wrenches for in-line reaction outside wrench profile
- Replaces standard reaction arm via quick release locking pin
- Steel/light alloy construction (reaction flat machined on tube end)
- Can be cut down to suit specific length
- Available for full range of tool sizes

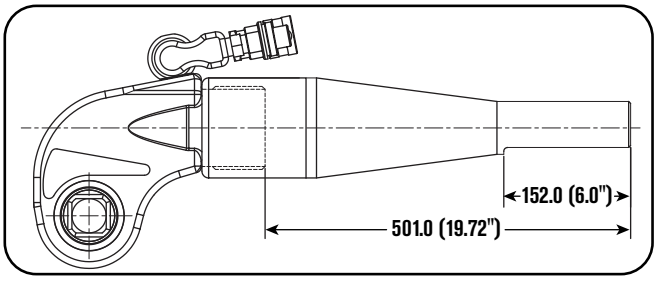

Ordering Information

Tool Ref	Order No.	L1 (in.)	L2 (in.)
TWHC11	TWHC11-LRA	19.72	6.00

Model Shown:
TWLC Body



* Links sold separately.
Tool is not shipped with link.

Features

THE CLEARANCE TOOL FEATURES A LONG NECK, SHORT HEIGHT, AND SMALL NOSE RADIUS FOR INACCESSIBLE BOLTING AREAS FOUND IN INDUSTRY.

- Corrosion resistant finish, low weight, high strength steel body construction design with superior torsional strength.
- Fine tooth ratchet with floating piston design with small nose radius, allows for a fast operation cycle.
- Link pin does not fall out.
- Multi-axis high flow swivel manifold with internal relief valve prevents retract side over-pressurization
- “Hardened” steel reaction pad on TWLC8, 15 & 30
- Simple design, auto-connect drive piston quick interchangeable heads, no tools necessary, consistent torque output
- Replaceable reaction pad on larger models
- Power Team PowerThon™ Limited Lifetime Warranty

Handle Options



TWLC2 + DFTAS000001
TWLC4 + DFTAS000002
TWLC8
TWLC15

Handle can be mounted to either Link or Drive Body. TWLC4 only- use adaptor DFTHA000003 to mount handle to drive body

Torque Wrench Hoses - Non-Conductive Dual Line



Order No.	Hose Length (ft.)	Hose I.D. (in.)
TWH15	15	1/4"
TWH20	20	1/4"
TWH30	50	1/4"

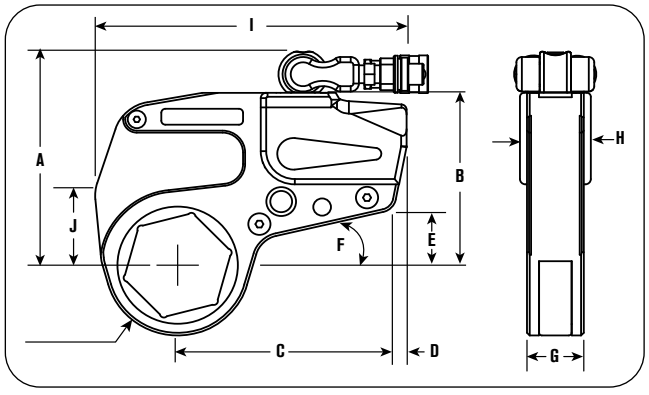

Technical Dimensions

Body Order No.	A (in.)	B (in.)	C (in.)	D (in.)	E (in.)	F (deg.)	G (in.)	H (in.)
TWLC2	5.4	4.1	5.0	0.3	1.4	13	1.3	1.7
TWLC4	6.4	5.1	6.3	0.4	1.7	13	1.7	2.0
TWLC8	7.7	6.2	7.0	1.0	1.6	14	2.1	2.6
TWLC15	8.8	7.3	7.9	1.1	1.7	14	2.5	3.0
TWLC30	10.9	9.4	10.5	1.0	2.4	15	3.2	3.7

Ordering Information

Tool Model	Hex Range (in.)	Min. Torque (ft. lbs.)	Max. Torque (ft. lbs.)	Weight (Body Only) (lbs.)
TWLC2	1.25 - 2.38	189	1,575	2.2
TWLC4	1.50 - 3.13	477	3,975	4.4
TWLC8	2.38 - 3.88	954	7,950	7.7
TWLC15	2.56 - 4.63	1,782	14,850	15.4
TWLC30	3.13 - 6.13	3,456	28,800	31.9



Special sizes available upon request.

LOW CLEARANCE - REDUCERS

Body Order No.	Link Part No.	Nut A/F (in.)	Reducer (in.)	Reducer Part No.	Reducer (in.)	Reducer Part No.	Reducer (in.)	Reducer Part No.
	TWL2-032	1.25	—	—	—	—	—	—
	TWL2-036	1.44	—	—	—	—	—	—
	TWL2-041	1.63	1.63 - 1.44	TWR2-041036	1.63 - 1.25	TWR2-041032	—	—
TWLC2	TWL2-046	1.81	1.81 - 1.63	TWR2-046041	1.81 - 1.44	TWR2-046036	1.81 - 1.25	TWR-046032
	TWL2-050	2.00	2.00 - 1.81	TWR2-050046	2.00 - 1.63	TWR2-050041	2.00 - 1.44	TWR2-050036
	TWL2-055	2.19	2.19 - 2.00	TWR2-055050	2.19 - 1.81	TWR2-055046	2.19 - 1.63	TWR2-055041
	TWL2-060	2.38	2.38 - 2.19	TWR2-060055	2.38 - 2.00	TWR2-060050	2.38 - 1.81	TWR2-060046
	TWL4-041	1.63	1.63 - 1.44	TWR4-041036	1.63 - 1.25	TWR4-041032	—	—
	TWL4-046	1.81	1.81 - 1.63	TWR4-046041	1.81 - 1.44	TWR4-046036	1.81 - 1.25	TWR4-046032
	TWL4-050	2.00	2.00 - 1.81	TWR4-050046	2.00 - 1.63	TWR4-050041	2.00 - 1.44	TWR4-050036
	TWL4-055	2.19	2.19 - 2.00	TWR4-055050	2.19 - 1.81	TWR4-055046	2.19 - 1.63	TWR4-055041
TWLC4	TWL4-060	2.38	2.38 - 2.19	TWR4-060055	2.38 - 2.00	TWR4-060050	2.38 - 1.81	TWR4-060046
	TWL4-065	2.56	2.56 - 2.38	TWR4-065060	2.56 - 2.19	TWR4-065055	2.56 - 2.00	TWR4-065050
	TWL4-070	2.75	2.75 - 2.56	TWR4-070065	2.75 - 2.38	TWR4-070060	2.75 - 2.19	TWR4-070055
	TWL4-075	2.94	2.94 - 2.75	TWR4-075070	2.94 - 2.56	TWR4-075065	2.94 - 2.38	TWR4-075060
	TWL4-080	3.13	3.13 - 2.94	TWR4-080075	3.13 - 2.75	TWR4-080070	3.13 - 2.56	TWR4-080065
	TWL8-060	2.38	2.38 - 2.19	TWR8-060055	2.38 - 2.00	TWR8-060050	2.38 - 1.81	TWR8-060046
	TWL8-065	2.56	2.56 - 2.38	TWR8-065060	2.56 - 2.19	TWR8-065055	2.56 - 2.00	TWR8-065050
	TWL8-070	2.75	2.75 - 2.56	TWR8-070065	2.75 - 2.38	TWR8-070060	2.75 - 2.19	TWR8-070055
	TWL8-075	2.94	2.94 - 2.75	TWR8-075070	2.94 - 2.56	TWR8-075065	2.94 - 2.38	TWR8-075060
TWLC8	TWL8-080	3.13	3.13 - 2.94	TWR8-080075	3.13 - 2.75	TWR8-080070	3.13 - 2.56	TWR8-080065
	TWL8-085	3.38	3.38 - 3.13	TWR8-085080	3.38 - 2.94	TWR8-085075	3.38 - 2.75	TWR8-085070
	TWL8-090	3.50	3.50 - 3.38	TWR8-090085	3.50 - 3.13	TWR8-090080	3.50 - 2.94	TWR8-090075
	TWL8-095	3.75	3.75 - 3.50	TWR8-095090	3.75 - 3.38	TWR8-095085	3.75 - 3.13	TWR8-095080
	TWL8-100	3.88	3.88 - 3.75	TWR8-100095	3.88 - 3.50	TWR8-100090	3.88 - 3.38	TWR8-100085
	TWL15-070	2.75	2.75 - 2.56	TWR15-070065	2.75 - 2.38	TWR15-070060	2.75 - 2.19	TWR15-070055
	TWL15-075	2.94	2.94 - 2.75	TWR15-075070	2.94 - 2.56	TWR15-075065	2.94 - 2.38	TWR15-075060
	TWL15-080	3.13	3.13 - 2.94	TWR15-080075	3.13 - 2.75	TWR15-080070	3.13 - 2.56	TWR15-080065
	TWL15-085	3.38	3.38 - 3.13	TWR15-085080	3.38 - 2.94	TWR15-085075	3.38 - 2.75	TWR15-085070
	TWL15-090	3.50	3.50 - 3.38	TWR15-090085	3.50 - 3.13	TWR15-090080	3.50 - 2.94	TWR15-090075
TWLC15	TWL15-095	3.75	3.75 - 3.50	TWR15-095090	3.75 - 3.38	TWR15-095085	3.75 - 3.13	TWR15-095080
	TWL15-100	3.88	3.88 - 3.75	TWR15-100095	3.88 - 3.50	TWR15-100090	3.88 - 3.38	TWR15-100085
	TWL15-105	—	—	—	—	—	—	—
	TWL15-425	4.25	4.25 - 3.88	TWR15-425388	4.25 - 3.75	TWR15-425375	4.25 - 3.50	TWR15-425350
	TWL15-110	—	—	—	—	—	—	—
	TWL15-115	—	—	—	—	—	—	—
	TWL15-463	4.63	4.63 - 4.25	TWR15-463425	4.63 - 3.88	TWR15-463388	4.63 - 3.75	TWR15-463375
	TWL30-080	3.13	3.13 - 2.94	TWR30-080075	3.13 - 2.75	TWR30-080070	3.13 - 2.56	TWR30-080065
	TWL30-085	3.38	3.38 - 3.13	TWR30-085080	3.38 - 2.94	TWR30-085075	3.38 - 2.75	TWR30-085070
	TWL30-090	3.50	3.50 - 3.38	TWR30-090085	3.50 - 3.13	TWR30-090080	3.50 - 2.94	TWR30-090075
	TWL30-095	3.75	3.75 - 3.50	TWR30-095090	3.75 - 3.38	TWR30-095085	3.75 - 3.13	TWR30-095080
	TWL30-100	3.88	3.88 - 3.75	TWR30-100095	3.88 - 3.50	TWR30-100090	3.88 - 3.38	TWR30-100085
	TWL30-105	—	—	TWR30-105100	—	TWR30-105095	—	TWR30-105090
	TWL30-425	4.25	4.25 - 3.88	TWR30-425388	4.25 - 3.75	TWR30-425375	4.25 - 3.50	TWR30-425350
	TWL30-110	—	—	—	—	—	—	—
TWLC30	TWL30-115	—	—	—	—	—	—	—
	TWL30-463	4.63	4.63 - 4.25	TWR30-463425	4.63 - 3.88	TWR30-463388	4.63 - 3.75	TWR30-463375
	TWL30-120	—	—	—	—	—	—	—
	TWL30-500	5.00	5.00 - 4.63	TWR30-500463	5.00 - 4.25	TWR30-500425	5.00 - 3.88	TWR30-500388
	TWL30-130	—	—	—	—	—	—	—
	TWL30-135	5.38	5.38 - 5.00	TWR30-135125	5.38 - 4.63	TWR30-135120	5.38 - 4.25	TWR30-135115
	TWL30-145	5.75	AVAILABLE UPON REQUEST					
	TWL30-150	—						
	TWL30-155	6.13						

Nut A/F	TWLC2					TWLC4					TWLC8				
	Link Order No.	Radius R	I	J	Weight (Link Only)	Link Order No.	Radius R	I	J	Weight (Link Only)	Link Order No.	Radius R	I	J	Weight (Link Only)
(in.)		(in.)	(in.)	(in.)	(lbs.)		(in.)	(in.)	(in.)	(lbs.)		(in.)	(in.)	(in.)	(lbs.)
1.13	TWL2-026	1.24	7.09	1.50	4.41	-					-				
1.06	TWL2-027					-									
1.13	TWL2-029					-									
1.19	TWL2-030					-									
1.25	TWL2-032					-									
1.31	TWL2-033					TWL4-033	1.44	8.94	2.09	8.82					
1.38	TWL2-035					TWL4-035									
1.44	TWL2-036					TWL4-036									
1.50	TWL2-150	1.36	7.13	1.57	4.41	TWL4-150									
1.56	TWL2-040					TWL4-040									
1.63	TWL2-041					TWL4-041									
1.69	TWL2-043	1.46	7.20	1.57	4.41	TWL4-043	1.54	8.94	2.09	8.82					
1.75	TWL2-044					TWL4-044									
1.81	TWL2-046					TWL4-046					-				
1.88	TWL2-188	1.57	7.28	1.69	4.41	TWL4-188	1.65	8.94	2.09	8.82	TWL8-188	1.99	10.79	3.03	15.43
1.94	TWL2-049					TWL4-049					TWL8-049				
2.00	TWL2-050					TWL4-050					TWL8-050				
2.06	TWL2-052	1.67	7.28	1.69	4.41	TWL4-052	1.75	8.94	2.09	8.82	TWL8-052				
2.13	TWL2-054					TWL4-054					TWL8-054				
2.19	TWL2-055					TWL4-055					TWL8-055				
2.25	TWL2-057	1.79	7.28	1.69	4.41	TWL4-225	1.87	8.94	2.09	8.82	TWL8-057				
2.31	TWL2-059					TWL4-059					TWL8-059				
2.38	TWL2-060					TWL4-060					TWL8-060				
2.44	-					TWL4-062	1.97	8.94	2.09	8.82	TWL8-062	2.09	10.79	3.03	16.53
2.50	-					TWL4-063					TWL8-063				
2.56	-					TWL4-065					TWL8-065				
2.63	-					TWL4-067	2.09	9.02	2.20	8.82	TWL8-067	2.20	10.79	3.03	16.53
2.69	-					TWL4-068					TWL8-068				
2.75	-					TWL4-070					TWL8-070				
2.81	-					TWL4-071	2.19	9.02	2.20	9.92	TWL8-071	2.30	10.79	3.03	16.53
2.88	-					TWL4-073					TWL8-073				
2.94	-					TWL4-075					TWL8-075				
3.00	-					TWL4-077	2.32	9.06	2.28	9.92	TWL8-077	2.44	10.91	2.83	17.64
306	-					TWL4-313					TWL8-313				
3.13	-					TWL4-080					TWL8-080				
3.19	-					-					TWL8-081	2.64	10.91	2.83	17.64
3.25	-					-					TWL8-083				
3.31	-					-					TWL8-084				
3.38	-					-					TWL8-085				
3.44	-					-					TWL8-087				
	-					-					TWL8-089				
3.50	-					-					TWL8-090				
3.56	-					-					TWL8-091	2.89	10.91	2.83	7.64
3.63	-					-					TWL8-092				
3.69	-					-					TWL8-094				
3.75	-					-					TWL8-095				
3.81	-					-					TWL8-097				
	-					-					TWL8-388				
3.88	-					-					TWL8-100				

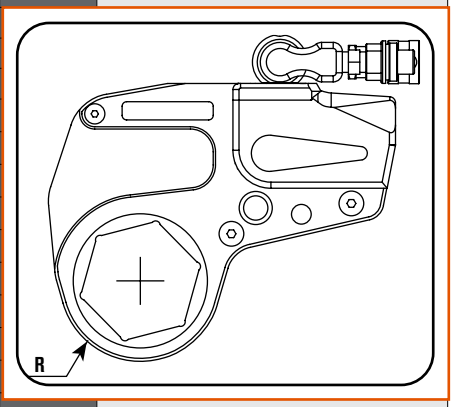

NOTE:
The sizes listed on these pages encompass both heavy hex and standard hex nut sizes.
Check your local SPX FLOW Power Team Office for availability as some items may be special order.

Nut A/F	TWLC15					TWLC30				
	Link Order No.	Radius R	I	J	Weight (Link Only)	Link Order No.	Radius R	I	J	Weight (Link Only)
(in.)		(in.)	(in.)	(in.)	(lbs.)		(in.)	(in.)	(in.)	(lbs.)
2.44	TWL15-062	2.38	12.32	3.46	27.56	-				
2.50	TWL15-063					-				
2.56	TWL15-065					-				
2.63	TWL15-067					-				
2.69	TWL15-068					-				
2.75	TWL15-070					-				
2.81	TWL15-071	2.48	12.32	3.46	27.56	-				
2.88	TWL15-073					-				
2.94	TWL15-075					-				
3.00	TWL15-077	2.62	12.32	3.46	28.66	-				
3.06	TWL15-313					-				
3.13	TWL15-080	2.83	12.32	3.46	29.76	TWL30-080	3.03	15.47	4.09	58.42
3.19	TWL15-081					TWL30-081				
3.25	TWL15-083					TWL30-083				
3.31	TWL15-084					TWL30-084				
3.38	TWL15-085					TWL30-085				
3.44	TWL15-087					TWL30-087				
	TWL15-089					TWL30-089				
3.50	TWL15-090					TWL30-090				
3.56	TWL15-091	3.07	12.44	3.15	29.76	TWL30-091	3.27	15.47	4.09	58.42
3.63	TWL15-092					TWL30-092				
3.69	TWL15-094					TWL30-094				
3.75	TWL15-095					TWL30-095				
3.81	TWL15-097					TWL30-097				
	TWL15-388					TWL30-388				
3.88	TWL15-100					TWL30-100				
4.00	TWL15-102	3.25	12.44	3.15	30.86	TWL30-102	3.50	15.47	4.09	60.63
4.06	TWL15-103					TWL30-103				
4.13	TWL15-105					TWL30-105				
4.19	TWL15-106					TWL30-106				
4.25	TWL15-425					TWL30-425				
4.31	TWL15-110	3.44	12.44	3.15	30.86	TWL30-110	3.62	15.47	4.09	60.63
4.38	TWL15-111					TWL30-111				
4.44	TWL15-113					TWL30-113				
4.50	TWL15-114					TWL30-114				
	TWL15-115					TWL30-115				
4.56	TWL15-116					TWL30-116				
4.63	TWL15-463					TWL30-463				
4.69	-					TWL30-119	3.90	15.75	4.29	62.83
4.75	-					TWL30-120				

Nut A/F	TWLC30 (Continued)				
	Link Order No.	Radius R	I	J	Weight (Link Only)
(in.)		(in.)	(in.)	(in.)	(lbs.)
4.81	TWL30-122	3.90	15.75	4.29	62.83
	TWL30-123				
4.88	TWL30-124				
4.94	TWL30-125				
5.00	TWL30-500				
5.06	TWL30-129	4.13	15.75	4.29	62.83
5.13	TWL30-130				
5.19	TWL30-132				
5.25	TWL30-133				
5.38	TWL30-135				
	TWL30-538				
5.44	TWL30-138	4.33	15.75	4.29	62.83
5.50	TWL30-140				
5.56	TWL30-141				
5.63	TWL30-143				
5.69	TWL30-144				
5.75	TWL30-145				
	TWL30-146				
5.81	TWL30-148	4.57	15.75	4.29	65.04
5.88	TWL30-149				
	TWL30-150				
5.94	TWL30-151				
6.00	TWL30-152				
6.06	TWL30-154				
6.13	TWL30-155				

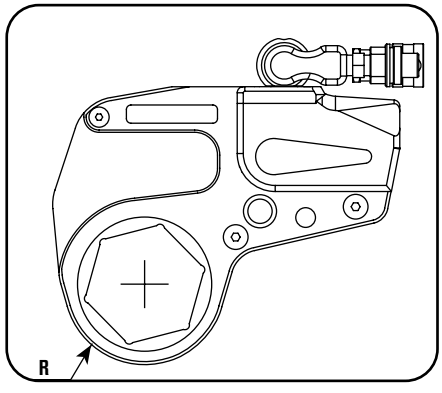

TO SPECIFY A TWLC SOLUTION:

1. Find a link for your application (nut size)
2. Choose the appropriate drive body
3. Add reducers for additional nut sizes

NOTE: Please order Drive Body and Link separately and pay attention to the same size, for Example TWLC2 and TWL2-041.

TWLC REACTION BAR TWLC-RB



Features

- In-Line Extension Reaction Bar for TWLC wrenches allows extended reach on the same plane
- Pin engagement, no tools required
- Available for full range of tool sizes

Reaction Accessories

Power Team offers a varied range of alternative and optional reaction accessories which help to find a reaction point solution no matter how unusual the bolted application is.

Ordering Information

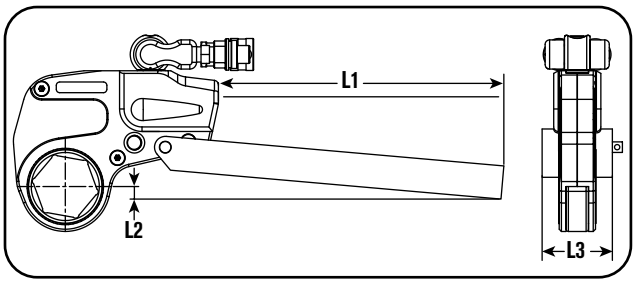

Tool Ref	Order No.	L1 (in.)	L2 (in.)	L3 (in.)
TWLC2	TWLC2-RB	15.00	1.10	2.17
TWLC4	TWLC4-RB	18.00	1.38	2.60
TWLC8	TWLC8-RB	18.00	1.46	3.35
TWLC15	TWLC15-RB	20.00	1.57	4.01
TWLC30	TWLC30-RB	20.00	1.38	5.00

TWLC REACTION PADDLE TWLC-RP



Features

- Off-Set Reaction Arm for TWLC wrenches allows off-set reaction within wrench profile
- Pin engagement, no tools required
- Light alloy construction
- Available for full range of tool

Ordering Information

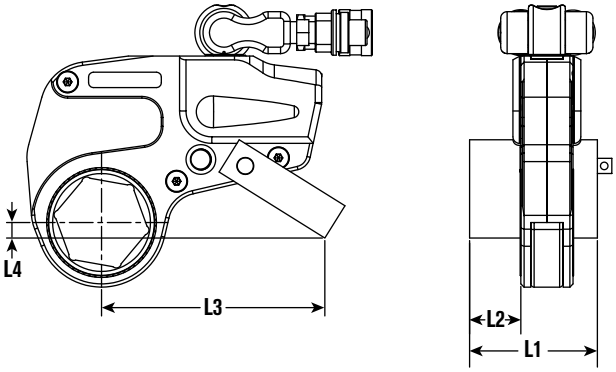

Tool Ref	Order No.	L1 (in.)	L2 (in.)	L3 (in.)	L4 (in.)
TWLC2	TWLC2-RP	3.31	1.38	5.59	0.51
TWLC4	TWLC4-RP	4.29	1.81	7.01	0.75
TWLC8	TWLC8-RP	5.37	2.25	8.66	1.02
TWLC15	TWLC15-RP	6.50	2.76	9.92	1.77
TWLC30	TWLC30-RP	7.874	3.39	12.48	1.73

HAVE A UNIQUE APPLICATION?
DOES STANDARD PRODUCT NOT FIT?







CUSTOM REACTION PADS AND REDUCERS ARE AVAILABLE.

Contact SPX FLOW, or an authorized Power Team distributor, for more details!

Model Shown:

TWSL4-046 Link (left) & TWSL4-060 Link with TWLC4 Drive Body (right)



Features

ENGINEERED TO FIT INACCESSIBLE APPLICATIONS WITH MINIMAL CLEARANCE.

- Dynamic engineering modeling (Finite Element Analysis and optimized tool design to extend life and durability).
- The SlimLine links use the same quick change Drive Body as the existing TWLC links
- Small nose radius, fits all standard API and ANSI flanges.
- Rigid steel body construction with corrosion resistant plating.
- Fully-enclosed drive mechanism for operator safety.
- Swivel manifold has an internal relief valve to prevent retract side over-pressurization.
- Multi-axis swivel technology for free positioning of tool and hoses.

Other Related Items

Contact your nearest Power Team sales representative for assistance in sizing the proper tool for your application, or go to *powerteam.com* website for details about other available link sizes not listed.



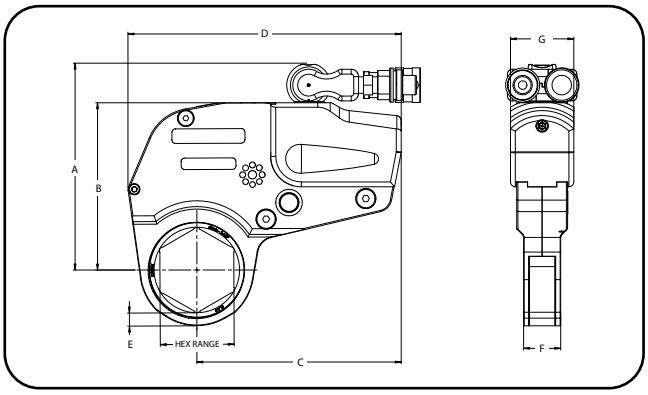

Drive Body interchanges with the TWLC & TWSL link sizes

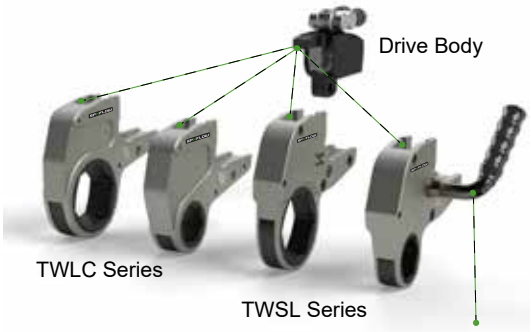

Optional Handle

Order #: DFTAS000001 for TWSL2
DFTAS000002 for TWSL4

The Drive Body is designed to interchange with the TWLC (Low Clearance) and the new TWSL (SlimLine) Links, lowering your tool investment across each series to broaden your application reach.

Handle can be mounted to either Link or Drive Body. TWLC4 only - use adaptor DFTHA000003 to mount handle to drive body

Technical Dimensions

Order No.	A (in.)	B (in.)	C (in.)	D (in.)	E (in.)	F (in.)	G (in.)
TWSL2	5.71	4.49	5.04	7.26	0.35	0.98	1.65
TWSL4	6.61	5.39	6.61	8.83	0.42	1.20	2.04

Technical Fit Overview



The TWSL's narrow width and reduced radius design enables the tool to fit into tight areas where standard low clearance links cannot.

SlimLine Application Range

Due to the compact design, the maximum torque of the TWSL links vary depending on link size, reference the information below for complete details.

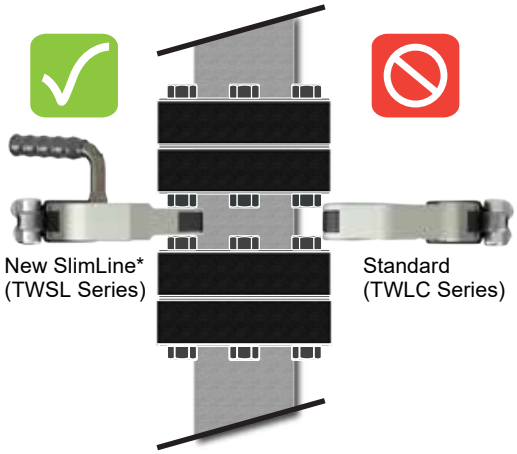

** Shown with optional handle, order # DFTAS000001 for TWSL2, DFTAS00002 for TWSL4.*

Torque Wrench Drive Body Ordering Information for SlimLine

Drive Body Order No.	Hex Range for SlimLine (in.)	(in.)	SlimLine Min. Torque (ft. lbs.)	SlimLine Max. Torque (ft. lbs.)	Weight (Link Only) (lbs.)
TWLC2	1.13	2.38	222	1,240 - 1,850	2.2
TWLC4	1.81	3.13	505	2,639 - 4,210	4.4

Note: Links are sold separately from the drive body, refer to the tables below.

Torque Wrench Link Ordering Information for SlimLine

Link Order No.	Hex Range for SlimLine (in.)	(in.)	SlimLine Min. Torque (ft. lbs.)	SlimLine Max. Torque (ft. lbs.)	Weight (Link Only) (lbs.)
TWSL2-#	1.13	2.38	222	1,240 - 1,850	4.2 - 4.5
TWSL4-#	1.81	3.13	505	2,639 - 4,210	8.0 - 8.4

Note: The "#" suffix will be replaced with the actual link size in a numeric value.

TWSL2 SlimLine Link Reference Table*

Nut A/F (in.)	Link Order No.	Max. Torque (ft. lbs.)	Weight (Link Only) (lbs.)
1.25	TWSL2-032	1,240	4.1
1.44	TWSL2-036	1,430	4.2
1.63	TWSL2-041	1,600	4.3
1.81	TWSL2-046	1,850	4.3
2.00	TWSL2-050	1,850	4.3
2.19	TWSL2-055	1,850	4.4
2.38	TWSL2-060	1,850	4.4

TWSL4 SlimLine Link Reference Table*

Nut A/F (in.)	Link Order No.	Max. Torque (ft. lbs.)	Weight (Link Only) (lbs.)
1.81	TWSL4-046	2,639	8.0
2.00	TWSL4-050	3,271	8.2
2.19	TWSL4-055	3,568	8.2
2.38	TWSL4-060	3,867	8.3
2.56	TWSL4-065	4,210	8.4
2.75	TWSL4-070	4,210	8.4
2.94	TWSL4-075	4,210	8.4
3.13	TWSL4-080	4,210	8.4

Model Shown:
400148



Features

- Pressure balanced spool mechanism allowing for easier trigger pull/squeeze effort (fatigue reduction)
- Two-stage trigger system (interlock and trigger) preventing accidental operation/advancement of the tool
- 2:1 Safety Factor (pressure test min 20,000 psi)
- Can be used with any hydraulic torque wrench

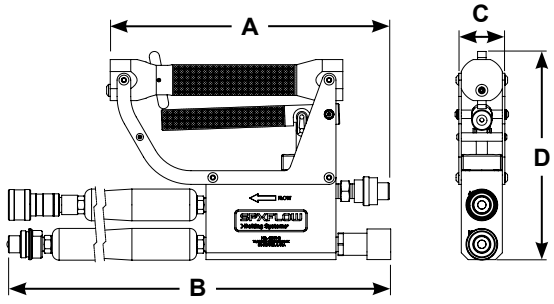

Specifications subject to change without notice

Ordering Information

Order No.	A	B	C	D	Prod. Wt.
	(in.)	(in.)	(in.)	(in.)	(lbs.)
4000148	10.382	30.75	1.883	7.609	6.19

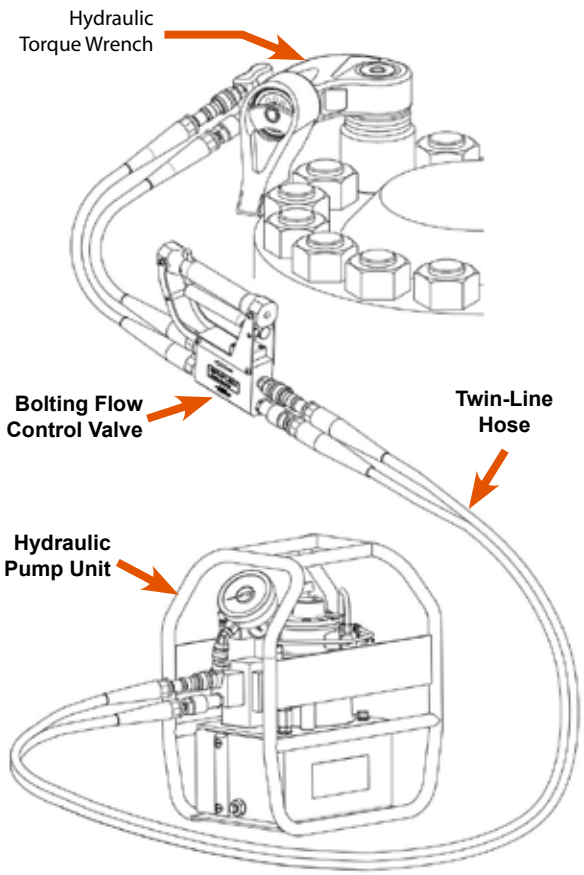

BOLTING FLOW CONTROL VALVE

- Allows the operator to position the torque wrench with zero risk of entrapment or nipped fingers
- Suitable for hydraulic tool applications where local isolation and operator control is required
- Isolates the wrench whilst operator carries out drive direction changes, link switch over on low profile tools

Other Related Items


Pumps


Wrenches


Hoses

Refer to the Bolting Systems catalog or website for more details.



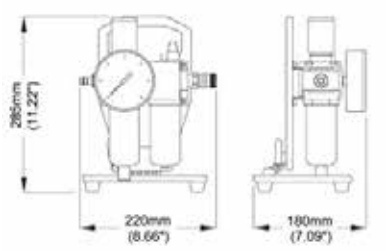

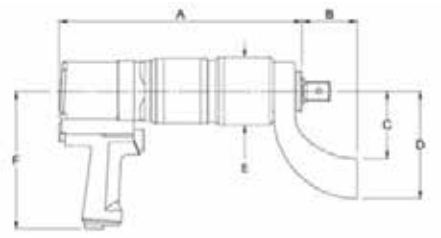

Features

QUALITY MEANS HIGHER PRODUCTIVITY

- High-speed continuous rotation, speeds up bolt working times
- Torque output accurate to +/- 3%.
- Unique calibration for each tool, with certificate.
- Stepless torque adjustment via air control unit, large easy read air pressure gauge

DESIGNED WITH SAFETY IN MIND

- Quiet operation for greater operator comfort.
- Robust, non-impact, low vibration gearbox design
- Pistol grip design for easy handling

ENHANCED USABILITY

- High-low gear, two-speed design for rapid nut rundown.
- Easy access motor switch to change drive direction
- 360 Degree rotating drive unit for easy reaction arm positioning
- Automatic switch-off at desired torque

Technical Dimensions

Tool Model	Min. Torque		Max. Torque		Square Drive	Rotation Speed	A	B	C	D	E	F	Wt.	
	Nm	lb-feet	Nm	lb-feet	(in)	RPM	Millimeters (Inches)						Kg	Lbs
NRP-9	60	44	900	664	3/4	40	317 (12.48)	72 (2.83)	88 (3.46)	140 (5.51)	88 (3.46)	180 (7.09)	7.4	16
NRP-15	100	74	1500	1107	3/4	28	317 (12.48)	72 (2.83)	88 (3.46)	140 (5.51)	88 (3.46)	180 (7.09)	7.4	16
NRP-30	190	140	3000	2214	1	13	351 (13.82)	72 (2.83)	88 (3.46)	140 (5.51)	88 (3.46)	180 (7.09)	8.5	19
NRP-45	300	221	4500	3321	1 1/2	9	362 (14.25)	9.2 (3.62)	105 (4.13)	175 (6.89)	102 (4.02)	180 (7.09)	11.2	25
NRP-60	480	354	6000	4428	1 1/2	6	317 (12.48)	9.2 (3.62)	105 (4.13)	175 (6.89)	102 (4.02)	180 (7.09)	11.2	25

*Maximum Working Air Pressure 6.3Bar (90psi)
** Weight not including Reaction Arm

Ordering Information

Order No.	Description
NRP-9K	NRP-9K Pneumatic Torque Wrench Kit
NRP-15K	NRP-15K Pneumatic Torque Wrench Kit
NRP-30K	NRP-30K Pneumatic Torque Wrench Kit
NRP-45K	NRP-45K Pneumatic Torque Wrench Kit
NRP-60K	NRP-60K Pneumatic Torque Wrench Kit

Each kit consists of Pneumatic Torque Wrench, Air Control Unit (NRP-CU), 4m Air Hose (AH4M), Storage Case (2010883), Calibration Certificate, Operating Manual/Parts List



Model Shown:

PE55TWP-4-BS, PE55TWP-BS



Features

VANGUARD® ELECTRIC HYDRAULIC TORQUE WRENCH PUMPS.

- Two-speed high-performance pump.
- External adjustable pressure regulator
- Retract side internal relief valve protects tool.
- Hand remote control with 20 ft. cord.
- Use for single or double-acting tools.
- Four-tool manifold allows use of up to four tools simultaneously.

CAUTION

THIS PUMP SHOULD NOT BE USED FOR LIFTING APPLICATIONS, IT'S DESIGN FOR TORQUE WRENCH APPLICATIONS ONLY.

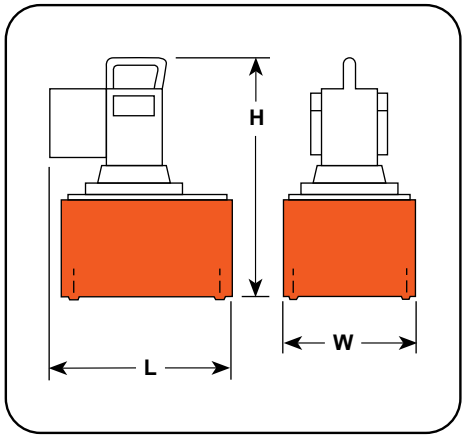

Ordering Information

Order No.	Width (in.)	Length (in.)	Height (in.)	Electric Motor (12,000 rpm)	No. of Tools	Oil Delivery per min. (cu. in.)	Oil Reservoir Cap. (gal.)	Usable Oil (cu. in.)	Prod. Wt. (lbs.)
PE55TWP-BS	9.50	17.14	18.12	110/115VAC, 50/60 Hz, 25A	1	704 in³ @ 100 psi 56 in³ @ 10,000 psi	2.50	324	75.00
PE55TWP-220-BS	9.50	17.14	18.12	220/230VAC, 50/60 Hz, 13A	1		2.50	324	75.00
PE55TWP-E110*	9.50	17.14	18.12	110VAC, 50 Hz, 25A	1		1.25	324	75.00
PE55TWP-E220*	9.50	17.14	18.12	220VAC, 50 Hz,, 13A	1		1.25	324	75.00
PE55TWP-4-BS	9.50	17.14	18.12	110/115V, 50/60 Hz, 25A	4	704 in³ @ 100 psi 56 in³ @ 10,000 psi	2.50	324	78.00
PE55TWP-4-CF-BS	12.80	17.50	18.70	110/115V, 50/60 Hz, 25A	4		2.50	324	83.00
PE55TWP-4-220-BS	9.50	18.49	19.15	220/230VAC, 50/60 Hz, 13A	4		2.50	324	78.00
PE55TWP-4-E110*	9.50	18.49	19.15	110VAC, 50 Hz, 25A	4		1.25	324	78.00
PE55TWP-4-E220*	9.50	18.49	19.15	220VAC, 50 Hz,, 13A	4		1.25	324	78.00

* CE Approved - designed for 50 Hz applications
Pump models with -BS suffix are supplied with black reservoir and Bolting Systems branding

Model Shown:
RWP55-4-BS-R



Features

AIR HYDRAULIC TORQUE WRENCH PUMP

- Use where air is the preferred source of power.
- Powerful 3 hp motor starts under load.
- External adjustable pressure regulator.
- Retract side internal relief valve protects tools.
- Use for single or double-acting tools.
- Four-tool manifold allows use of up to four tools simultaneously.
- 25 ft. pneumatic remote controller included.

CAUTION

THIS PUMP SHOULD NOT BE USED FOR LIFTING APPLICATIONS, IT'S DESIGN FOR TORQUE WRENCH APPLICATIONS ONLY.

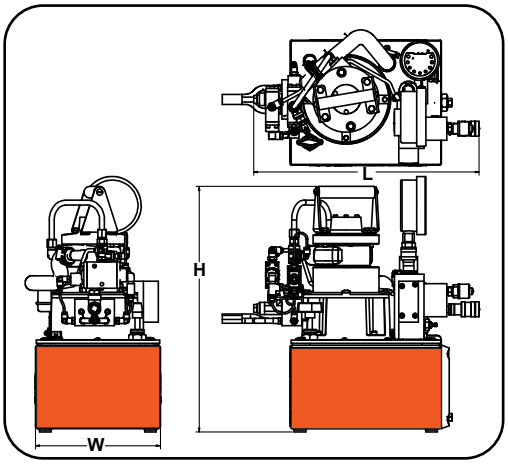

Ordering Information

Order No.	Width (in.)	Length (in.)	Height (in.)	Air Motor	No. of Tools	Oil Delivery per min. (cu. in.)	Oil Reservoir Cap. (gal.)	Usable Oil (cu. in.)	Prod. Wt. (lbs.)
RWP55-BS	9.50	16.55	19.83	3HP, 50 cfm @ 80 psi	1	465 in^3 @ 100 PSI 55 in^3 @ 10,000 PSI	2.50	324	98.00
RWP55-BS-R	11.90	18.70	21.00	3HP, 50 cfm @ 80 psi	1	465 in^3 @ 100 PSI 55 in^3 @ 10,000 PSI	2.50	324	103.00
RWP55-4-BS	9.50	16.55	19.83	3HP, 50 cfm @ 80 psi	4	465 in^3 @ 100 PSI 55 in^3 @ 10,000 PSI	2.50	324	101.00
RWP55-4-BS-R	11.90	18.70	21.00	3HP, 50 cfm @ 80 psi	4	465 in^3 @ 100 PSI 55 in^3 @ 10,000 PSI	2.50	324	106.00

Pumps supplied with black reservoir and Bolting Systems branding. For Roll Cage, add -R, after Order No.

Model Shown:

HNS150, HNS150A, HNS225







Features

HYDRAULIC NUT SPLITTERS

- Specially designed “tool steel” cutter blade penetrates the nut to the precise point where it cracks, stopping short of the bolt threads.
- Dial-in” feature on HNS150 makes adjustment of splitter simple, without the worry of damaging the bolt.
- Nut splitter features a dramatically improved cutter blade with an 800% greater resistance to chipping and breaking over previous models.
- Compact size allows you to use it in confined areas where it will deliver enough force to split the toughest “fused” or rusted-on grade 2H nuts.
- All models feature a rugged one-piece cutting frame coupled to a heavy-duty hydraulic cylinder.

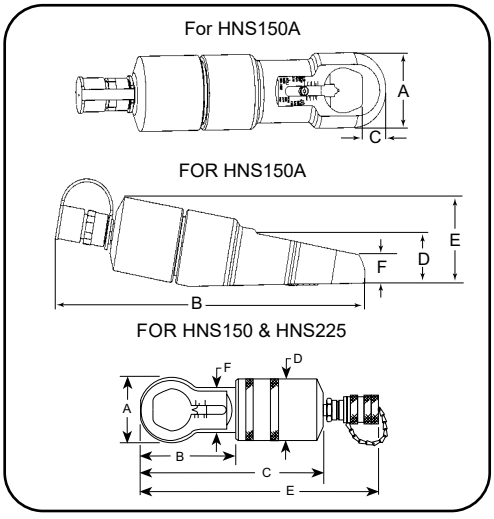

Align mark on cutter blade with scale.



Ordering Information

Order No.	A (in.)	B (in.)	C (in.)	D (in.)	E (in.)	F (in.)	Head Thickness (in.)	Replacement Blade	Prod. Wt. (lbs.)
HNS150	2.88	3.38	0.65	2.75	10.38	2.06	1.0	308840	8.10
HNS150A	3.02	14.20	1.03	2.11	3.70	1.16	1.0	351985	15.80
HNS225	4.25	6.00	14.38	3.88	—	3.25	1.5	308022	29.00

NUT GRADE CAPACITIES				
Order No.	2 or A	5 or B	8 or C	2H
HNS150	1/2 - 1-1/2 in. hex	1/2 - 1-1/2 in. hex	1/2 - 1-5/16 in. hex	1/2 - 1-1/8 in. hex
HNS150A	1/2 - 1-1/2 in. hex	1/2 - 1-1/2 in. hex	1/2 - 1-5/16 in. hex	1/2 - 1-1/8 in. hex
HNS225	1-1/8 - 2-1/4 in. hex	1-1/8 - 2-1/4 in. hex	1-1/8 - 2-1/16 in. hex	1-1/8 - 1-11/16 in. hex

Model Shown:

FLS15, FLS15-ST



Features

INTEGRATED WEDGE CONCEPT IDEAL FOR CREATING SPACE FOR FLANGE SURFACE CLEANING AND REPAIR

- 33,000 pound wedge-driven spreader. Jaws fully supported by wedge for excellent durability.
- Low friction provided by heavy-duty extended-life lubricant, ideal for flanges with narrow gaps (only 0.2 inches required for entry).
- Compact and lightweight design (only 9.9 inches long at a weight of 7 pounds).
- Ergonomically balanced handle included.
- Suitable for the offshore environment due to superior corrosion resistance
- Quick adjustments for various tasks due to interchangeable shoes (both stepped and serrated)
- Easy and quick maintenance without special tools required.
- Includes female half coupler & mates to standard 3/8” male half coupler (9798).

FLS15 Spreader

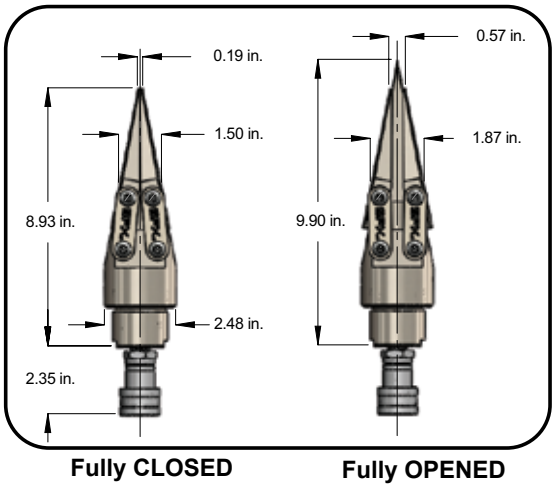

Fully CLOSED Fully OPENED

FLS15-ST Spreader

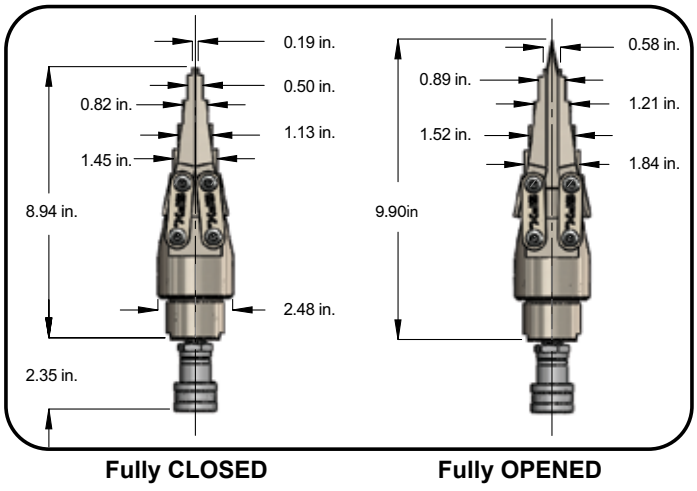

Fully CLOSED Fully OPENED

Order No.	Maximum Spreading Force (lbs.)	Minimum Tip Clearance (in.)	Maximum Tip Spread (in.)	Spreader Type	Oil Cap. (cu. in.)	Maximum Operating Pressure (psi.)	Prod. Weight (lbs.)
FLS15 FLS15–ST	33,000	0.197 Inches	0.59 Inches	Hydraulic	1	10,000	7.00

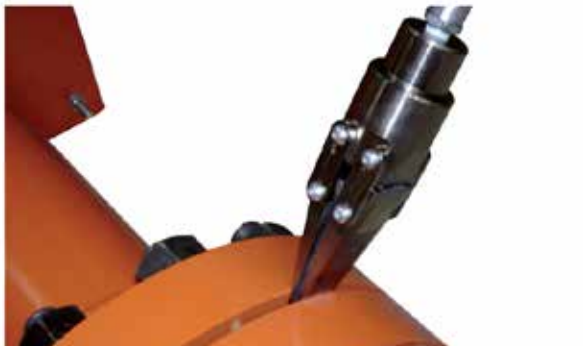

TYPICAL APPLICATIONS:

- Pipe and flange repair
- Removing elbows
- Couplers & gasket and metal seal replacement
- Heavy equipment maintenance

OTHER OPTIONAL ACCESSORIES

HANDLE



Order No.	Description
2008410	Lightweight spreaders handle is designed for use with FLS15 or FLS15-ST. Wt., 0.12 lbs.

STEPPED BLOCK



Order No.	Description
SB15	Use to increase the wedge opening. Designed to use with FLS15 or FLS15-ST. (1 piece).

STEPPED SHOE



Order No.	Description
2008083*	Lightweight spreader stepped shoe with an interlocking friction-free smooth, parallel wedge design, Wt. 0.64 lbs.

SERRATED SHOE



Order No.	Description
2008082*	Lightweight spreader serrated shoe.

PUMP



Order No.	Description
P19L	Two-speed, single-acting hand pump . 29 cu. in. oil capacity. Wt. 5.10 lbs.

HOSE



Order No.	Description
9764	Hydraulic hose assembly.

ANALOG GAUGE



Order No.	Description
9040	Pressure gauge.

* Part number is for one shoe only. Two shoes required per spreader.

COUPLER & GAUGE ADAPTER



Order No.	Description
9798	Male half coupler.



Order No.	Description
9670	Gauge adapter

Model Shown:
HFS3A



Features

CONTROLLED AND GUIDED FLANGE SEPARATION TOOL

- You'll never again have to resort to "hammer and chisel" methods that waste time and effort. Flange spreaders should be used in pairs to provide even spreading force.
- Use HFS3A for applications where total thickness of flanges and max. spread gap is 3 or less, and flange bolts are a min. of 0.69" diameter.
- Use HFS6A if total thickness of flanges and max. spread gap is 6" or less, and flange bolts are a min. of 0.81" diameter.

OPTIONAL WEDGE ENDS

Standard 60° wedge is suitable for most flanges; 30° "thin" and 60° "blunt" wedges are optional.

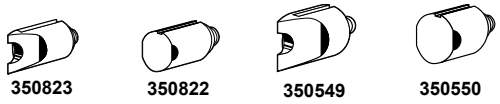

HFS6AP59L spreader offers up to 10 tons of spreading force to safety separate this flange.



Ordering Information

Order No.	Cap. (ton)	Standard Wedge Type	Optional Wedges 30° Thin	Optional Wedges 60° Blunt	Min. Flange Opening 60° Std. (in.)	Min. Flange Opening 60° Blunt (in.)	Min. Flange Opening 30° (in.)	Min. Flange Opening 60° Std. (in.)	Min. Flange Opening 60° Blunt (in.)	Min. Flange Opening 30° (in.)	Min. Combined Flange Opening (in.)	Pin Dia. (in.)	Prod. Wt. (lbs.)
HFS3A	5	60° Sharp	350823	350822	0.06	1.00	0.06	1.25	1.25	0.72	3.50	0.69	9.00
HFS6A	10	60° Sharp	350549	350550	0.06	1.50	0.06	2.00	2.00	0.97	6.56	0.81	18.00

Model Shown:

HS2000, HS3000





Features

HYDRAULIC SPREADERS OFFER A GREATER FORCE THAN TRADITIONAL MECHANICAL TOOLS.

- Use to lift machines to spread concrete forms or rebar and perform straightening jobs.
- Conforms to ASME B30.1 standard.
- High strength alloy steel forged upper and lower jaws on HS2000.
- Jaws are spring-return to retract automatically when pressure is released.

HS2000 (FORGED STEEL)

- 1 ton capacity spreader, full 2,000 lbs. capacity at 10,000 PSI with 4" spread.
- Can be "dead-ended" at 4" spread under full load.
- Needs only 0.56" clearance to engage jaws.

HS3000 (HIGH GRADE DUCTILE IRON)

- 1.5 ton capacity spreader, full 3,000 lb. capacity at 10,000 psi. with 11.5" spread.
- Needs only 1.25" clearance to engage jaws.
- Can be "dead-ended" at 11.50" spread at full load.

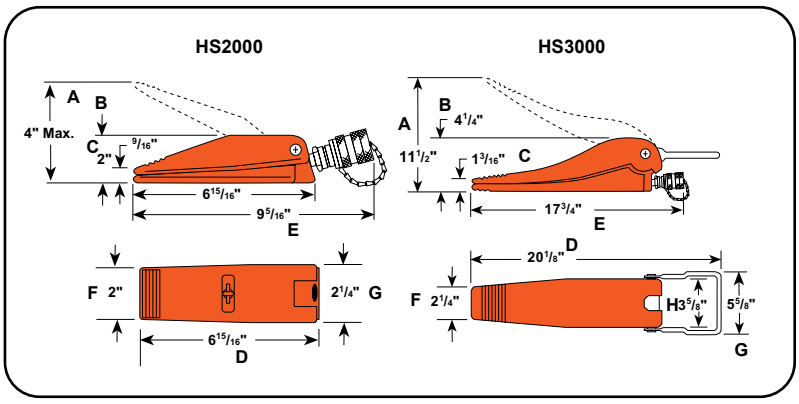

Ordering Information

Order No.	Cap. (ton)	Max. Spread (in.)	A (in.)	B (in.)	C (in.)	D (in.)	E (in.)	F (in.)	G (in.)	H (in.)	Oil Cap. (cu. in.)	Min. Clearance Required (in.)	Prod. Wt. (lbs.)
HS2000	1.0	4.00	4.00	2.00	0.56	6.94	9.31	2.00	2.25	—	0.63	0.56	4.80
HS3000	1.5	11.50	11.50	4.50	1.19	20.13	17.75	2.25	5.63	3.63	3.50	1.25	22.00

Model Shown:
CC10



Features

- In 5, 10 and 25 ton capacities. For use with Power Team general purpose single-acting series cylinders of comparable capacity.
- For clamping, pressing and bending. Ideal for welding and metal fabrication for fit-up of sheet or plate steel.
- Clamps withstand full rated capacity of the cylinders for which they are intended.

Note: To minimize the effects of off-center loading, the CC5, CC10 and CC25 should be used with the optional 350144 and 350145 swivel caps.

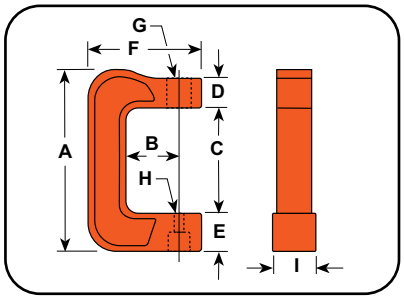

Ordering Information

Order No.	Cap. (ton)	A (in.)	B (in.)	C (in.)	D (in.)	E (in.)	F (in.)	G (in.)	H (in.)	I (in.)	Use With Cyl. No.	Prod. Wt. (lbs.)
CC5	5	12.38	3.75	7.31	2.00	2.50	7.75	1 1/2" - 16 UN	0.88	3.00	C51C-C57C	25.00
CC10	10	15.88	6.00	9.81	2.00	3.00	10.75	2 1/4" - 14 UNS	0.88	3.50	C101C-C1010C	50.00
CC25	25	21.00	6.00	13.00	3.00	4.00	12.31	3 5/16" - 12 UNS	1.44	4.63	C251C-C2514C	96.00

OTHER OPTIONAL ACCESSORIES WITH CC5, CC10 & CC25 HYDRAULIC CLAMPS

SWIVEL CAPS



Order No.	Cap. (ton)	A (in.)	B (in.)
350144 *	5 - 10	1.38	0.75
350145	25	2.00	1.00

PUSHING ADAPTERS

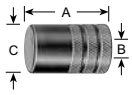

Order No.	Cap. (ton)	A (in.)	B (in.)	C (in.)
25228**	10	2.38	1 - 8	1.50
28229**	25	2.88	1.25 - 7	1.75

THREADED ADAPTERS

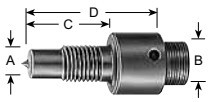

Order No.	Cap. (ton)	A (in.)	B (in.)	C (in.)	D (in.)
38597	10	1 - 8	1 - 8	0.75	2.00
38953	25	1.5 - 16	1.5 - 16	2.75	4.38

PUSHING ADAPTERS

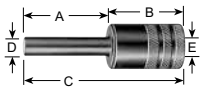

Order No.	Cap. (ton)	A (in.)	B (in.)	C (in.)	D (in.)	E (in.)
201923**	10	3.13	2.25	5.38	0.50	1 - 8
34510**	25	3.25	2.63	5.88	0.75	1.25 - 7

V PUSHING ADAPTERS

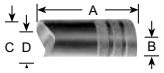

Order No.	Cap. (ton)	A (in.)	B (in.)	C (in.)	D (in.)
34806**	10	2.63	1 - 8	1.50	1.00
34807**	25	3.13	1.25 - 7	1.75	1.25

* May be used with CC5

** Must be used with a threaded adapter.

PUSHING ADAPTERS

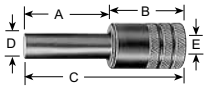

Order No.	Cap. (ton)	A (in.)	B (in.)	C (in.)	D (in.)	E (in.)
201454**	10	3.06	2.63	5.69	0.75	1 - 8
34511**	25	3.25	2.63	5.88	1.00	1.25 - 7

PUSHING ADAPTERS

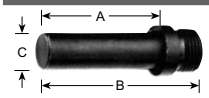

Order No.	Cap. (ton)	A (in.)	B (in.)	C (in.)
309874*	5	2.03	2.78	0.63

Model Shown:
HP35S



Features

- Punch smooth, precise holes in seconds. Much faster than drilling.
- Fully portable for construction, maintenance and service applications, or can be mounted on a workbench for production jobs.
- Has carrying handle for precise locating.
- Rugged, forged steel C-Frame for great strength and durability.
- Dual-action, spring-loaded stripper holds material during punching operation, strips material from punch on return. Scribe lines on stripper aid in locating the punch.

RECOMMENDED PRODUCTS

The PE172 electric/hydraulic pump is an ideal power source, which is included in item # HP35SP.

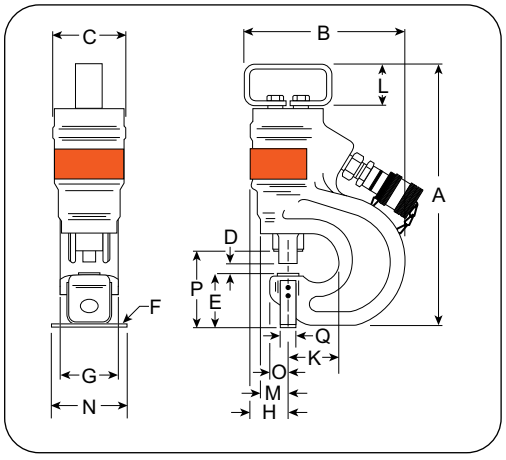

Technical Dimensions

Order No.	Cap.	Max. Oper. Press.	Oil Cap.	Max. Material Thickness	A	B	C	D	E	F	G	H	K	L	M	N	O	P	Q
	(ton)	(psi)	(cu. in.)	(in.)	(in.)	(in.)	(in.)	(in.)	(in.)	(in.)	(in.)	(in.)	(in.)	(in.)	(in.)	(in.)	(in.)	(in.)	(in.)
HP35	35	10,000	4.6	0.50	13.75	9.00	3.75	0.56	2.88	0.25	3.00	1.81	2.81	2.25	1.50	3.50	0.88	4.00	0.75

Model Shown:
HP35SP



Ordering Information

Order No.	Description	Prod. Wt. (lbs.)
HP35	Punch only, includes metal case and die change tools.	42.50
HP35S	Punch with punches and dies. Includes HP35 punch, metal case and 250459 punch/die set.	44.00
HP35P *	Punch set with pump. Same as HP35SP, but does not include punch/die set.	86.30
HP35SP *	Punch set with pump. Includes HP35 punch, PE172 electric/hydraulic pump, 9756 hose, 9798 hose half coupler, 250459 punch/die set, metal case.	87.80
250459	Punch/die set for round holes. Includes one each: PD437 0.44" punch/die, PD562 0.56" punch/die, PD688 0.69" punch/die, PD812 0.81" punch/die.	1.50

* **NOTE:** Available in 220VAC, 50 Hz. Order with suffix "-220".


Flat Die


Coupling Nut


Punch

Optional Coupling Nut Wrench



Order No.	Description
252000	Makes punch/die changes easier without "rounding-off" coupling nuts. Wt., 0.5 lbs.

PUNCH / DIE SETS FOR HP35 HYDRAULIC PUNCHES

Punch Size (in.)	Punch Style	Hole Dia. (in.)	Punch with Flat Die Set	Punch with Bevel Die Set
0.25	○ Round	0.25	—	—
0.31		0.31	PD313	—
0.38		0.38	PD375	PD375B
0.44		0.44	PD437	PD437B
0.53		0.53	PD531	PD531B
0.56		0.56	PD562	PD562B
0.69		0.69	PD688	—
0.78		0.78	PD781	—
0.81		0.81	PD812	—

Return to Top

Model Shown:
HT200



Features

75 AND 200 GPM IN-LINE HYDRAULIC TESTERS

- Accurately measure oil flow, pressure and temperature on in-plant equipment, forklifts, machine tools and more.
- Temperature and flow readings are in Imperial and Metric and accurate to within ±2% of full scale.
- Dual pressure gauges for high and low pressure readings. Low pressure gauge is automatically shut-off and protected as pressure rises beyond its maximum reading.
- Automatic pressure compensating feature lets you increase flow without affecting pressure setting.
- Reverse flow through tester will not cause damage. A replaceable safety disc ruptures if pressure exceeds upper limit.
- Solid state voltage regulator eliminates errors caused by voltage change during testing.

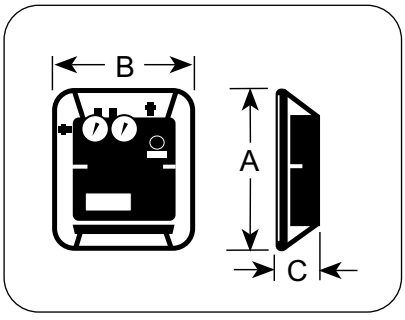

Ordering Information

Order No.	Max. Flow (gpm)	Scale	Flow Range (gpm)	Flow Range (l/min..)	Max. Oper. Press. (psi.)	Temp. Scale Range (°F)	Port Sizes	A (in.)	B (in.)	C (in.)	Prod. Wt. (lbs.)
HT75	75	High	15 - 75	50 - 300	5,000	100 - 250	3/4" NPT Swivel	13.75	11.88	5.75	18.20
		Low	3 - 15	10 - 60							
HT200	200	High	25 - 200	100 - 750	5,000	100 - 250	1 1/2" SAE Split Flange	15.88	13.25	6.75	28.20
		Low	5 - 40	20 - 150							

AUXILIARY POWER CORDS FOR USE WITH 75 AND 200 GPM TESTERS



CAUTION: For use on negative ground systems only.

Order No.	Description
37045	Auxiliary power cord. For use with any 12 or 24VAC battery to remotely power tester. Wt. 0.1 lb.

HOSES



Order No.	Description
9785	Hose, 3/4" I.D. x 3/4" NPTF male both ends. 10 ft. length. 2,250 psi working pressure. (2 req'd on 50 and 75 gpm testers). Wt., 0.7 lb.
9786 *	Hose, 1" I.D. x 1-1/4" NPT male both ends. Recommended max. flow 90 gpm, with a working pressure of 4,000 psi. Wt., 14.0 lbs.
9787 *	Hose, 1-1/4" I.D. x 1-1/4" NPT male both ends. Recommended max. flow 140 gpm, with a working pressure of 3,000 psi. Wt., 21.0 lbs.
9788 *	Hose, 1-1/2" I.D. x 1-1/2" NPT male both ends. Recommended max. flow 200 gpm, with a working pressure of 2,500 psi. Wt., 25.0 lbs.

* Hose assemblies are all 4-ply spiral wound wire, 10 ft. long. For use with 200 gpm testers.

HOSE REDUCER BUSHINGS



Order No.	Description
203264	Consists of two hose reducer bushings, 1-1/4" NPT female x 1-1/2" NPT male end. Needed to adapt 9786 1" I.D. hose and 9787 1-1/4" I.D. hose to tester. Wt., 2.2 lbs.

Typical Set-up: Testing the pump, relief valve, and directional valve

TESTING A PUMP	TESTING A RELIEF VALVE	TESTING A DIRECTIONAL VALVE
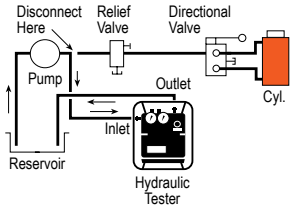	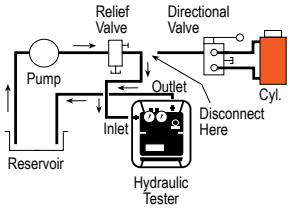	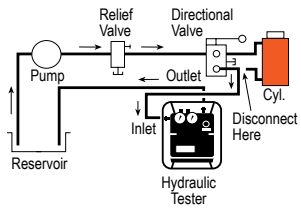

HYDRAULIC FITTINGS FOR USE WITH ALL TESTERS.

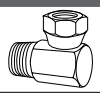	16954	**90° Swivel Adapter.** 3/4" NPTF male x 3/4" NPSM female. Wt., 0.8 lb.
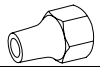	22041	**Coupler.** 3/4" NPTF male x 3/4"–16 female ORB. Wt., 0.5 lb.
	22042	**Coupler.** 3/4" –16 female ORB x 1-1/16"–12 female 37° JIC. Wt., 0.4 lb.
	22043	**Coupler.** 3/4" –16 female ORB x 9/16"–18 female 37° JIC. Wt., 0.4 lb.
	22044	**Coupler.** 3/4" –16 female ORB x 1/2"– 20 female 37° JIC. Wt., 0.4 lb.
	27737	**Swivel Adapter.** 3/4" –16 male x 3/4" NPSM female. For use with No. 9785 hose, which has 3/4" NPTF male thread. Wt., 0.3 lb.
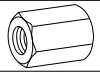	27287	**Coupler.** 3/4" –16 UNF female ORB x 7/8"–14 UNF female 37° JIC. Wt., 0.4
	13449	**Cap.** 1-1/16"–12 UNF female, 3/4" O.D. tube, 37° flare. Wt., 0.2 lb.
	26068	**45° Swivel Adapter.** 1" NPTF male x 3/4" NPSM female. Wt., 0.8 lb.
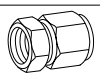	26069	**Swivel Adapter.** 1" NPTF female x 3/4" NPSM female. Wt., 0.5 lb.
	26070	**Adapter.** 1" NPTF male x 3/4" NPTF female. Wt., 0.3 lb.
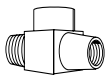	26071	**Service Tee.** 3/4" NPTF female (2) x 3/4" NPTF male. Wt., 0.9 lb.
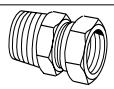	26072	**Swivel Adapter.** 3/4" NPSM female x 1/2" NPTF male. Wt., 0.4 lb.
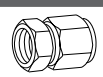	26073	**Swivel adapter.** 3/4" NPTF female x 1/2" NPSM female. Wt., 0.3 lb.
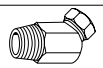	26074	**45° Swivel Adapter.** 3/4" NPSM female x 3/4" NPTF male. Wt., 0.6 lb.
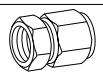	26075	**Swivel Adapter.** 3/4" NPSM female x 3/4" NPTF female. Wt., 0.4 lb.
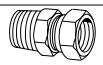	26076	**Swivel Adapter.** 3/4" NPTF male x 3/4" NPSM female. Wt., 0.4 lb.
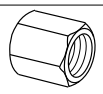	26077	**Cap.** 3/4" NPTF. Wt., 0.6 lb.
	26078	**Plug.** 3/4" NPTF. Wt., 0.3 lb.
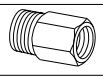	26079	**Adapter.** 3/4" NPTF female x 1-1/16" –12 male ORB. Wt., 0.4 lb.
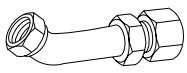	208402	**45° Union Adapter.** 7/8"–14 UNF male 37° JIC x 3/4" NPTF female. 3,000 psi working pressure. Wt., 0.6 lb.
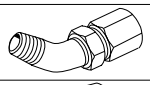	208401	**45° Union Adapter.** 7/8"–14 UNF male 37° JIC x 3/4" NPTF female. Wt., 0.7 lb.
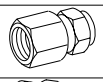	206753	**Coupler.** 1-15/16"–12 UNF female 37° JIC x 3/4" NPTF female. Wt., 1.1 lbs.
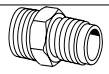	26666	**Connector.** 1-5/16"–12 UNF male 37° JIC x 3/4" NPTF male. Wt., 0.4 lb.
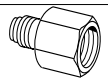	28984	**Straight Adapter.** 3/4" NPTF female x 1-3/16" –12 UN male 37° JIC. Wt., 0.6 lb.
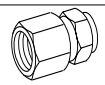	28985	**Straight Adapter Union.** 1-3/16"–12 UN female 37° JIC x 3/4" NPTF female. Wt., 1.3 lbs.

NOTE: The recommended maximum working pressure on the above fittings is 5,000 psi (except the 208402 is 3,000 psi).

Tools

HT200 HYDRAULIC TESTER ACCESSORIES

Attach to the HT200 hydraulic tester by the use of flanged-head adapters and split flanges, or by a set of female straight adapters.


203154


203155


203156


203017


203003

FLANGED HEAD ADAPTER UNIONS & SPLIT FLANGE KIT

Order No.	Description
203154	**Straight flange adapter.** 1-1/2" flanged-head to 1-1/2" NPSM female swivel. Wt., 2.2 lbs.
203155	**45° flange adapter.** 1- 1/2" flanged-head by 1-1/2" NPSM female swivel. Wt., 3.2 lbs.
203156	**90° flange adapter.** 1-1/2" flanged-head by 1-1/2" NPSM female swivel. Wt., 4.2 lbs.
203017	**Split Flange Kit.** Consists of four flange halves and attaching bolts to permit use of 1-1/2" I.D. flange adapters listed at left. Wt., 2.9 lbs.

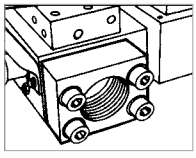

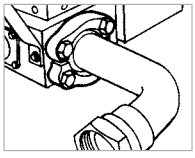

FEMALE STRAIGHT FLANGE ADAPTER

Order No.	Description
203003	Consists of two female straight flange adapters with attaching bolts. When attached to inlet/outlet ports, allows connection of 1-1/2" NPT male hose ends to tester. Wt., 8.5 lbs.

RETAINING RING PLIER KITS

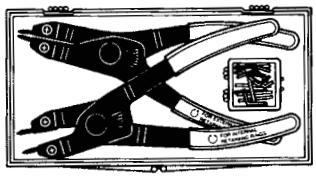

7053K

Choose from four sets; internal ring, external ring and convertible pliers for either internal or external rings.

Order No.	Description
7053K	Replaceable tip pliers kit. This versatile kit contains (1) internal and (1) external pliers with (8) tip sets. Two sets each: .038 dia. 90° bend, .047" dia. straight, .047" dia. 90° bend, .070" dia. straight. Recommended for 1/4"–2" rings. Packaged in plastic storage case. Wt., 0.8 lb.

RETAINING RING PLIERS SELECTION GUIDE

Order No.	Type of Pliers	Tip Bend	Tip Size Dia. (in.)	For Internal Rings † Bore Dia. (in.)	For External Rings † Shaft Dia. (in.)
1120	Convertible	Str.	0.038	0.375 - 0.562	0.250 - 0.672
1125*	Convertible	45°	0.038	0.375 - 0.562	0.250 - 0.672
1131**	Convertible	90°	0.038	0.375 - 0.562	0.250 - 0.672
1320	Convertible	Str.	0.047	0.625 - 1.023	0.687 - 0.875
1329	Convertible	90°	0.047	0.625 - 1.023	0.687 - 0.875
1340	Convertible	Str.	0.070	1.062 - 1.750	0.938 - 1.438
1345*	Convertible	45°	0.070	1.062 - 1.750	0.938 - 1.438
1349**	Convertible	90°	0.070	1.062 - 1.750	0.938 - 1.438

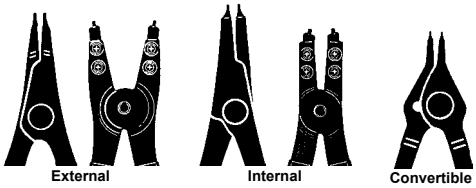

Fed. Spec.:GGG-P-480-E
* 45° Angled Tips
** 90° Angled Tips
† Capacities are shown for basic style rings.

CAUTION: Always wear safety goggles when using pliers

RATCHETING CHAIN WRENCHES



7400



7401

Special head design allows you to turn wrench in either direction. Ratcheting action makes it possible to re-grip without removal. Fits parts of most any size and shape.

Order No.	Description
7400	Chain wrench, cap. 0.50" to 4.75" O.D. (Capacity= 333 ft. lbs.) Handle length: 12.50". Wt., 2.0 lbs.
209199	Replacement chain with pin for 7400 chain wrench (16" long).
7401	Chain wrench, cap. 3" to 6.75" O.D. (Capacity= 666 ft. lbs.) Handle length: 19.00" Wt., 5 lbs.
209200	Replacement chain with pin for 7401 chain wrench (24" long).

PRY BARS



7162



7163
7164
7165

Our rolling head pry bars are an extremely popular and useful tool. Head may be used for almost any prying job since a great deal of leverage can be obtained. Long tapered body may be used as a lining-up drift.

Order No.	Description
7162	Pry bar; 0.38" round, 6" long. Wt., 0.3 lb.
7163	Pry bar; 0.44" round, 12" long. Wt., 0.6 lb.
7164	Pry bar; 0.56" round, 16" long. Wt., 1.1 lbs.
7165	Pry bar; 0.75" round, 18" long. Wt., 2.2 lbs.

ADJUSTABLE GLAND NUT WRENCH



Designed to handle 2" to 6" dia. hydraulic cylinder gland nuts on many construction vehicles. Fits 0.25" and 0.31" dia. pin holes. Features a 0.75" sq. drive.

Order No.	Description
1266	Adjustable gland nut wrench. Wt., 3.0 lbs.
204928	Replacement pin for 1266 (2 required)

JIMMY BARS



Ideal for general lifting or prying. Heat treated chrome alloy steel to resist bending or breaking.

Order No.	Description
7166	Jimmy bar; 0.63" round, 18" long. Wt., 1.4 lbs.
7167	Jimmy bar; 0.75" round, 24" long. Wt., 2.5 lbs.
7168	Jimmy bar; 0.88" round, 30" long. Wt., 4.3 lbs.

ADJUSTABLE HOOK SPANNER WRENCH



Needed wherever turret adjusting nuts or packing gland nuts are used. Adjust 1.5" to 4". Handle overall length: 19".

Order No.	Description
885	Adjustable hook spanner wrench. Wt., 3.0 lbs.

"MAJOR PERSUADER" JIMMY BARS



Two big jimmy bars for big jobs. Forged from chrome alloy steel.

Order No.	Description
7420	Jimmy bar; 0.88" round, 46" long. Wt., 7.5 lbs.
7421	Jimmy bar; 1" round, 54" long. Wt., 11.3 lbs.

HTS50 HEAVY-DUTY PIPE SEALANT WITH PTFE



Note: Product labeling may vary from picture.

- Seals new or damaged threads; resists water, chemicals and oils.
- Replaces conventional tape methods; forms a clog-free seal.
- Effective at 10,000 psi.

When "plumbing" a hydraulic system, there's now a better answer than tapes which can tear or shred, possibly plugging filters, valves or gauges. This compound combines the lubricating qualities of PTFE with a fast curing anaerobic sealant. Seals all metal fittings, plugs and threaded joints quickly and easily. Cures to form a permanent seal which is inert to hydrocarbons, most acids, chemicals, solvents and steam. Allows adjustment up to 16 hours after assembly; won't loosen under vibration. Prevents galling of mating parts upon disassembly. Withstands temperatures from 65° F to +375° F.

Order No.	Description
HTS50	Sealant, 50 ml. tube. Wt., 0.4 lb.

O-RING SEAL PICKS

7312



7103



Even the seemingly simple job of removing and installing O-ring seals can be difficult without the aid of the proper tool. The 7312 is constructed with plastic & steel O-ring seal pick does the job with ease. Two special picks in set 7103 get right to the trouble areas.

Order No.	Description
7312	O-ring seal pick. Wt., 0.1 lb.
7103	Set of two O-ring seal picks. Wt., 0.1 lb.

UNIVERSAL OUTSIDE THREAD CHASER



Restore damaged threads on shafts, housings, cages, etc., for re-assembly of matching parts. Eliminates need for thread-cutting equipment. Will not harm threads. V-pads and dies can be replaced. Cap. 1-1/4" to 5" O.D.

Order No.	Description
7402	Thread chaser, complete (with 6 dies: threads per inch – 4, 5, 6, 7, 7.5, 8, 9, 10, 11, 11.5, 12, 14, 16, 18, 20 and 24). Wt., 4.5 lbs.
202817	Metric die set (3 dies: mm per thread: 1, 1.25, 1.5, 1.75, 2, 2.5, 3, 3.5, and 4). Wt., 0.2 lb.

MAGNETIC PICK-UP TOOL



Has permanent magnetic head for retrieving parts from otherwise inaccessible places.

Order No.	Description
7395	Pick-up tool with pocket clip. 6" lg. Wt., 0.1 lb.

PULLERS

Return to Top

With the acquisition of Posi Lock, Power Team now offers a comprehensive line of mechanical and hydraulic pullers. These pullers are available in a two-jaw or three-jaw configuration. Mechanical pullers range from 1-40 ton capacity and hydraulic pullers range from 5-200 ton capacity. Turnkey packages are available to simplify your selection and setup. Additionally, specialty pullers, vises, and alignment tools are now available.

Range includes:

- Mechanical Pullers
- Hydraulic Pullers
- Puller Sets
- Bi-Directional™ Pullers
- High Tonnage Pullers
- Accessories & Adapters

THE CAGE® IS THE KEY

POSI LOCK®

An SPX FLOW Brand







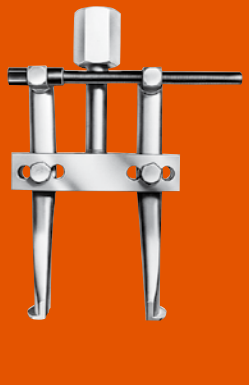



POWERTHON LIFETIME WARRANTY



























Section / Series	Page Description	Page(s)
Introduction	Puller Basics, Basic Puller Scenarios & Choosing the Right Puller	225-226
PT	Posi Lock® Mechanical Pullers	227
PTTJ	Posi Lock® Transmission Jaw Pullers	228
PTPM	Posi Lock® Internal Slide Hammer Pullers	229
PTPM	Posi Lock® Tool Board Sets	230
PTPMW PTTK PTTB	Posi Lock® Mechanical Puller Sets	231
PTHP PTFR	Posi Lock® Fan Removal Sets	232
PTPH	Posi Lock® Hydraulic Pullers	233-236
PTPH	Posi Lock® High Tonnage Hydraulic Pullers	237-240
PTPHS	Posi Lock® Self-Contained Pullers	241
PTPH	Posi Lock® Hydraulic Internal/External Pullers	242
1020-1027 1035-1050	Mechanical 2 & 3-Jaw Pullers	243-244
927-939	Michanical Bi-Directional™ Pullers	245-246
6981, SS2, 1178	Blind Hole Puller Set, Slide Hammer Puller Set, Slide Hammer	247
7136, 1173-1174, 1155-1158	Bearing Cup Remover, Pilot Bearing Pullers, basic Slide Hammer Units, Reversible-Jaw Slide Hammer Pullers, Slide Hammer Pullers w/Cup Pulling Attachements	248
PH63C, PH83C, PH113C, PH303C	Hydra Lock-Jaw™ 2 & 3-Jaw Pullers	249
K82-K83, HST11, 1188	Lock-Jaw™ Puller Accessories Kits Hydraulic Straightening Tool, Long Jaw Set	250
PH	Hydraulic Pullers	251-252
PPH	Bi-Directional™ Hydraulic Pullers	253-254
PHP	Bearing Pusher	255
PB	Puller Blankets	256
MB	Metal Boxes	256
PH	Enforcer 55 & Enforcer 100	257-258
PR	Roller Bearing Puller/Installer	259-260
1150-1154, 1165-1166, 1121-1130, 679-680	Pulling Attachments	261-262
	Puller Adapters	263-264

Components Requiring Extraction



Primary Markets / Applications



You need a firm grip, a straight pull and the proper force…



Whether it's a gear, wheel or bearing: If you grip it by its outer edges and apply force to the shaft, you can perform a proper pulling job.

Bearing cups, retainers and seals must be gripped through their inside diameters and pulled straight out to avoid damage.



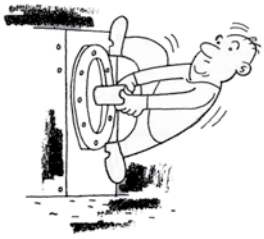

Gripping a shaft and bracing against the housing for the pull offers the best solution to this basic pulling problem.

Puller Selection



Tapered jaw design allows clamping around bearing for a perfect pull.



Tapered roller bearing on shaft.



Lock on ball grooves and bearing races.

HOW TO SELECT THE "RIGHT" PULLER

1. DETERMINE THE TYPE OF PULLER OR PULLER COMBINATION

Which puller type is best for "getting a grip" on the part, internal or external puller?

2. DETERMINE THE "REACH" NEEDED

The puller you select must have a "reach" equal to, or larger than, the corresponding dimension of the job.

3. DETERMINE THE "SPREAD" NEEDED

The width of the part to be pulled will determine the "spread" required.

4. ESTIMATE THE FORCE REQUIRED

A puller with the proper "reach" and "spread" will usually have enough power. When in doubt, always use the next larger size… more power may be needed for rusted parts, or when the "area of resistance" is large.

Considerations

The "area of resistance" or "area of press fit" can vary greatly between seemingly similar jobs, such as in the example shown below. Study each pulling job before you select the puller.

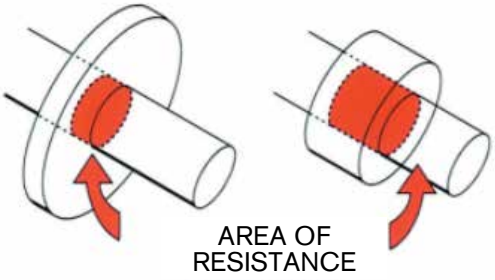

For manual, screw-powered pullers: The puller screw must be at least half as large (in diameter) as the shaft of the pulling job.

Hydraulic pullers suggestion for selection: The maximum force exerted in tons should be 7 to 10 times the diameter of the shaft in inches.

HOW TO MEASURE "REACH" AND "SPREAD"

"Reach" and "spread" dimensions of the job must first be determined. A typical example - a component to be removed from a shaft - is shown below. The length of the protruding shaft and the thickness of the component determine the "reach" needed. The width of the component determines the spread required.

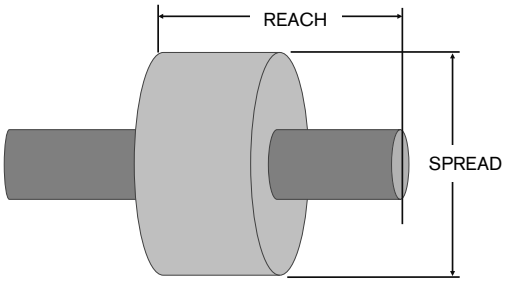

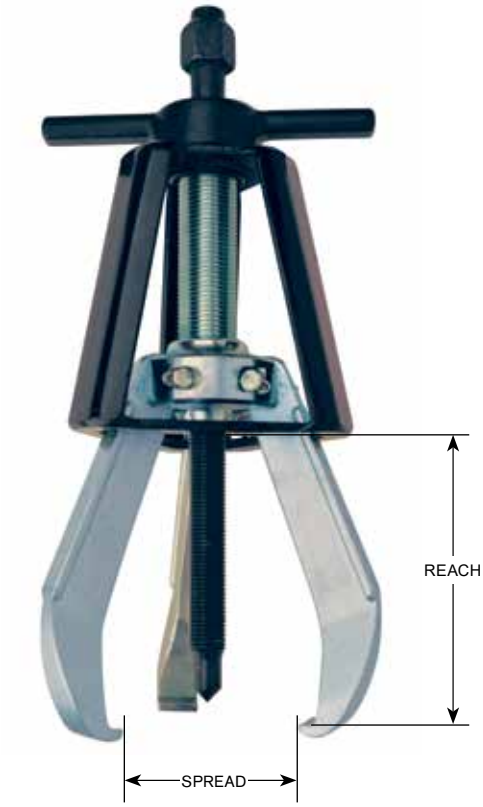

Model Shown:
PT110,
PT216



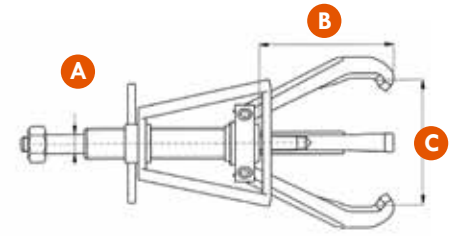

Features

PULLING BEARINGS IS A ONE-PERSON OPERATION WHEN USING THE PT SERIES MECHANICAL PULLERS. OPENING, CLOSING, LOCKING, AND ALIGNING OF THE JAWS IS ALL DONE AUTOMATICALLY BY SIMPLY TURNING THE T-HANDLE.

- 1 to 40-ton capacity puller with up to 14” (356 mm) reach and 25” (635 mm) spread for large pulling requirements
- Mechanical pullers use a rolled center bolt thread to reduce effort when applying high torque to extract objects in a controlled manner
- Recessed nut to avoid mushrooming and disfiguring
- Slim tapered heat-treated tips allow for better gripping and easier access in tight spots
- Safety Cage® guides jaws for fast set-up, solid contact and superior safety









Ordering Information

Order No.	Cap.	Jaws	Bolt Diameter A	Reach B	Spread C	Weight	Long Jaw/ XL Jaw Order No.	Reach	Spread	Optional Accessories: Tip Protector Order No.	Optional Accessories: Bolt Extender Order No.	Optional Accessories: Transmission Jaws Order No.
	Short Tons	Qty.	in. (mm)	in. (mm)	in. (mm)	lbs. (kg)	Long Jaws/Extra Long Jaw	in. (mm)	in. (mm)			
PT202	1	2	0.31 (7.9)	2.25 (57)	3.25 (82.6)	0.62 (0.28)	—	—	—	—	—	
PT203	2	2	0.37 (9.4)	3.00 (76.2)	4.50 (127)	1.12 (0.51)	—	—	—	—	—	
PT204	2	2	0.5 (12.7)	4.00 (102)	5.00 (127)	3 (1.36)	—	—	—	PTP4	PTX4	10454T
PT206	6	2	0.62 (15.8)	6.00 (152)	7.00 (178)	7 (3.18)	—	—	—	PTP6	PTX6	10654T
PT208	12	2	0.75 (19)	8.00 (203)	12.00 (305)	12 (5.44)	PT208L / PT208XL	9.8 (249) / 16.00 (406)	15.8 (401) / 22.00 (559)	PTP10	PTX10	11054T
PT210	14	2	0.75 (19)	9.67 (246)	15.00 (381)	13 (5.9)	PT210L	16.00 (406)	22.00 (559)	PTP10	PTX10	11054T
PT213	25	2	1.12 (28.5)	12.00 (305)	18.00 (457)	38 (17.24)	PT213L	20.00 (508)	30.00 (762)	PTP13/16	—	
PT216	35	2	1.25 (32)	14.00 (356)	25.00 (635)	57 (25.85)	PT216L	26.00 (660)	38.00 (965)	PTP13/16	—	
PT102	1	3	0.31 (7.9)	2.25 (57)	3.25 (82.6)	0.68 (0.31)	—	—	—	—	—	
PT103	2	3	0.37 (9.4)	3.00 (76.2)	4.50 (114.3)	1.3 (0.59)	—	—	—	—	—	
PT104	5	3	0.5 (12.7)	4.00 (102)	5.00 (127)	4.1 (1.86)	—	—	—	PTP4	PTX4	10454T
PT106	10	3	0.62 (15.8)	6.00 (152)	7.00 (178)	8 (3.63)	—	—	—	PTP6	PTX6	10654T
PT108	17	3	0.75 (19)	8.00 (203)	12.00 (305)	14 (6.35)	PT108L / PT108XL	9.8 (249) / 16.00 (406)	15.8 (401) / 22.00 (559)	PTP10	PTX10	11054T
PT110	20	3	0.75 (19)	9.67 (246)	15.00 (381)	16 (7.26)	PT110L	16.00 (406)	22.00 (559)	PTP10	PTX10	11054T
PT113	30	3	1.12 (28.5)	12.00 (305)	18.00 (457)	44 (19.96)	PT113L	20.00 (508)	30.00 (762)	PTP13/16	—	
PT116	40	3	1.25 (32)	14.00 (356)	25.00 (635)	68 (30.84)	PT116L	26.00 (660)	38.00 (965)	PTP13/16	—	

Model Shown:
PTTJ-1,
PTTJ-2,
PTTJ-3



Features

REMOVAL OF BEARINGS, BUSHINGS, SLEEVES AND OTHER FRICTION-FITTED PARTS CAN EASILY BE ACCOMPLISHED WITH USING THE SERIES PTTJ AUTOMOTIVE TRANSMISSION PULLERS.

- Pullers with up to 9.25” (235 mm) reach and 14.75” (375 mm) spread for large pulling requirements
- Machined jaws that clamp in snap-ring grooves as narrow as .070" (1.8 mm).
- Specially designed for transfer cases on 4-wheel-drive vehicles, output shaft bearings and numerous other applications on any vehicle
- Slim tapered heat-treated tips allow for better gripping and easier access in tight spots

Jaws that clamp in snap-ring grooves as narrow as .070" (1.8 mm)



A standard jaw (left) is compared to a specially machined transmission jaw (right).

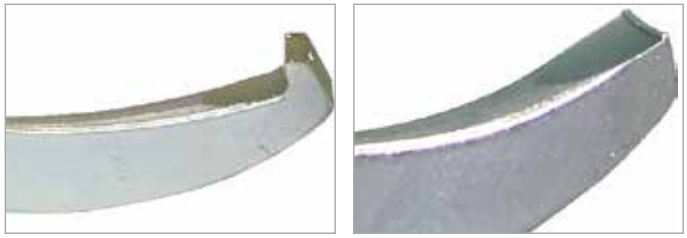

Ordering Information

Model	Number of Jaws	Reach	Spread	Weight	Tip Protector	Optional Accessories				
						Accessories		Optional Jaws		
						Description	Part #	Jaw Style	Reach	Spread
		in. (mm)	in. (mm)	lbs. (kg)					in. (mm)	in. (mm)
PTTJ-1	2	9.25 (235)	2.75 to 14.75 (70 to 375)	12 (5.4)	PTP10	Bolt Extender	PTX10	Jaw - 10854	8 (203)	.75 to 12 (19 to 305)
								Long Jaw - 11054	10 (254)	2.25 to 15 (57 to 381)
								Extra Long Jaw - 11054L	16 (406)	1.5 to 22 (38 to 559)
PTTJ-2	3	5.25 (133)	1 to 6.75 (25 to 171)	8 (3.6)	PTP6	Bolt Extender	PTX6	Jaw - 10654	6 (152)	.5 to 7 (13 to 178)
						Slide Rod Adaptor	PT10661			
						Slide Rod	PT10561			
						2.5 lb Slide Hammer	PT10562			
						5.0 lb Slide Hammer	PT10563			
PTTJ-3	3	4 (102)	.5 to 5.5 (13 to 140)	4.1 (1.9)	PTP4	TJ-3 Bolt Extender	PTX4	Jaw - 10454	4 (102)	.5 to 5 (13 to 127)
						Slide Rod	PT10561			
						2.5 lb Slide Hammer	PT10562			
						5.0 lb Slide Hammer	PT10563			

Model Shown:
PTPMI6



Features

DURABLE SLIDE HAMMER WITH TIGHT GRIPPING JAW DESIGN AND A SAFETY CAGE THAT GUIDES JAWS FOR FAST SET-UP, AND SOLID CONTACT FOR SUPERIOR SAFETY.

- Long internal jaws with slim tapered heat-treated tips allow for better gripping and easier access in tight spots
- High force 2.5 lb (1.13 kg) slide hammer for an effective use of force (optional ultra high force 5.0 lb (2.27 kg) slide hammer)
- Includes 3-Jaw puller (model no. PT105)
- Includes promotional tool board
- Safety Cage® guides jaws for fast set-up, solid contact and superior safety

Promotional Goods

Showcase your pullers with a branded, reinforced pegboard display in your showroom or shop.



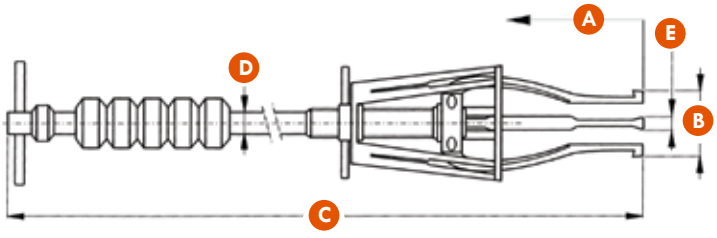

Kit Components	Description	Order No. PTPMI6
PT105	3-Jaw Internal Puller	1
PT10561	Slide Rod 24" (609 mm)	1
PT10562	2.5 lb. (1.13 kg) Slide Hammer	1
PT10554L	Long Jaw Set	1
2008508	Tool Board Kit, Posi Lock Tool Sets	1
PT10563	5 lb. (2.27 kg) Slide Hammer	Optional

Ordering Information

Model	Number of Jaws	Jaw Style	Reach A	Spread Range B	Slide Hammer Weight	Dimensions				Optional Accessories
						Overall Length C	Slide Rod Diameter D	Jaw Width E	Jaw Length	Slide Hammer Weight
			in. (mm)	in. (mm)	lbs. (kg)	in. (mm)	in. (mm)	in. (mm)	in. (mm)	lbs. (kg)
PTPMI6	3	Standard	2.78 (71)	.56-4 (14-102)	2.5 (1.1)	29 (737)	.52 (13)	.33 (8)	6.62 (168)	5 (2.3)
		Long	9 (229)	1-5.25(25-133)	2.5 (1.1)	31 (787)	.52 (13)	.33 (8)	8.62 (219)	5 (2.3)

Model Shown:

PTP



Peg Board with Pullers
Order No. PTPM4L



Peg Board Only
Order No. 2008508

Features

SHOWCASE YOUR PULLERS WITH A BRANDED, REINFORCED PEGBOARD DISPLAY IN YOUR SHOWROOM OR SHOP.

- 6 peg board promotional kits that offer many different variations
- Order the peg board separately for even greater flexibility
- Suitable for use behind a counter, parts desk or showroom

Ordering Information

Kit Components	Description	ORDER NUMBER					
		PTPM4	PTPM4L	PTPM4S	PTPM5	PTPM6	PTMPS16
PTP13/16	TIP PROTECTOR for PT113 / PT213 / PT116 / PT216	—	—	—	—	—	4
PTP10	TIP PROTECTOR PT108 / PT208 / PT110 / PT21	1	2	—	1	2	4
PTP6	TIP PROTECTOR for PT106 / PT206	2	2	2	2	2	2
PTP4	TIP PROTECTOR for PT104 / PT204	1	—	2	1	2	2
PT216	PULLER, MANUAL 2 JAW - 35 TON	—	—	—	—	—	1
PT213	PULLER, MANUAL 2 JAW - 25 TON	—	—	—	—	—	1
PT210	PULLER, MANUAL 2 JAW - 14 TON	—	1	—	—	1	1
PT208	PULLER, MANUAL 2 JAW - 12 TON	—	—	—	—	—	1
PT206	PULLER, MANUAL 2 JAW - 6 TON	1	1	1	1	1	1
PT204	PULLER, MANUAL 2 JAW - 2 TON	—	—	1	—	1	1
PT203	PULLER, MANUAL 2 JAW - 2 TON	—	—	—	—	—	1
PT202	PULLER, MANUAL 2 JAW - 1 TON	—	—	—	—	—	1
PT116	PULLER, MANUAL 3 JAW - 40 TON	—	—	—	—	—	1
PT113	PULLER, MANUAL 3 JAW - 30 TON	—	—	—	—	—	1
PT110	PULLER, MANUAL 3 JAW - 20 TON	1	1	—	1	1	1
PT108	PULLER, MANUAL 3 JAW - 17 TON	—	—	—	—	—	1
PT106	PULLER, MANUAL 3 JAW - 10 TON	1	1	1	1	1	1
PT104	PULLER, MANUAL 3 JAW - 5 TON	1	—	1	1	1	1
PT103	PULLER, MANUAL 3 JAW - 2 TON	—	—	—	1	—	1
PT102	PULLER, MANUAL 3 JAW - 1 TON	—	—	—	—	—	1
2008508	TOOL BOARD KIT, POSI LOCK TOOL SETS	1	1	1	1	2	2

Model Shown:

PTPMW-1

1 to 2 Ton Puller Set



Model Shown:

PTTK-107

4-in-1 Puller Set



Model Shown:

PTTB-1045

Internal/External
Slide Hammer Puller Set



Features

THESE PULLER SETS ARE ESSENTIAL IN REMOVING INTERNAL PILOT BEARINGS, BEARING CUPS, BUSHINGS, SEALS ALONG WITH EXTERNAL BEARINGS, BEARING RACES, PULLEYS, AND MANY OTHER PRESS-FIT ITEMS FROM ONE COMPACT SET.

Description	Qty	Number of Jaws	Capacity Tons (kN)	Reach in. (mm)
PT102 Puller	1	3	1 ton (9 kN)	2.25 (57)
PT202 Puller	1	2	1 ton (9 kN)	2.25 (57)
PT103 Puller	1	3	2 tons (18 kN)	3 (76.2)
PT203 Puller	1	2	2 tons (18 kN)	3 (76.2)
Case	1	12" x 17" x 5" (8 lbs.) 305 x 432 x 127 mm (3.6 kg)		
Optional				
PTPMW	Tool board set 16"x26" (406x660 mm)			

Description	Dimensions	Part #
Manual Puller	—	PT107
Tip Protector	—	PTP4
Internal Puller Jaws	—	PT10554
Slide Rod		PT10561
Slide Hammer	2.5 lb. (1.13 kg)	PT10562
Internal Puller Long Jaw (3)	—	PT10554L
Case	34" x 8.5" x 4.5" (15.8 lbs.) 864 x 216 x 114 mm (7.2 kg)	—
Optional Accessories		
Slide Hammer	5 lb. (2.27 kg)	PT10563
Small Hub Collar	0" to 1.5" (0 to 38 mm)	PTHP-30
Large Hub Collar	0" to 2" (0 to 51 mm)	PTHP-40
Extra Large Hub Collar	0" to 3" (0 to 76 mm)	PTHP-50
Tip Reducer/Extender	—	PTHP-70
Bolt Extender	—	PTX4
Transmission Jaw	—	PT10454T

Description	Dimensions	Part #
Manual Puller	—	PT107
Internal Puller	—	PT105
Tip Protector	—	PTP4
Slide Rod		PT10561
Slide Hammer	2.5 lb. (1.13 kg)	PT10562
Internal Puller Long Jaw (3)	—	PT10554L
Case	24" x 16.5" x 4.5" (18.3 lbs.) 610 x 419 x 114 mm (8.3 kg)	—
Optional Accessories		
Slide Hammer	5 lb. (2.27 kg)	PT10563
Small Hub Collar	0" to 1.5" (0 to 38 mm)	PTHP-30
Large Hub Collar	0" to 2" (0 to 51 mm)	PTHP-40
Extra Large Hub Collar	0" to 3" (0 to 76 mm)	PTHP-50
Tip Reducer/Extender	—	PTHP-70
Bolt Extender	—	PTX4
Transmission Jaw	—	PT10454T

Model Shown:
PTHP-1



Features

SIMPLIFY THE REMOVAL OF MANY INDUSTRIAL AND AUTOMOTIVE FANS AND BLOWER WHEELS BY PROVIDING A SOLID CONNECTION BETWEEN THE PULLER AND FAN HUB.

Includes

Description	Dimensions	Part #
Small Collar Adaptor	0" to 1.5" (0 to 38 mm)	PTHP-30
Large Collar Adaptor	0" to 2" (0 to 51 mm)	PTHP-40
Tip Reducer/Extender	—	PTHP-70
Square Head Set Screws (4)	—	PTHP-60
Optional Accessories		
Extra Large Hub Collar	0" to 3" (0 to 76 mm)	PTHP-50

Model Shown:
PTHP-2



Includes

Description	Dimensions	Part #
Manual Puller	—	PT104
Small Collar Adaptor	0" to 1.5" (0 to 38 mm)	PTHP-30
Large Collar Adaptor	0" to 2" (0 to 51 mm)	PTHP-40
Tip Reducer/Extender		PTHP-70
Square Head Set Screws (4)	—	PTHP-60
Case	13" x 9.5" x 5.5" (9 lbs.) 330 x 241 x 140 mm (4.1 kg)	—
Optional Accessories		
Extra Large Hub Collar	0" to 3" (0 to 76 mm)	PTHP-50

Model Shown:
PTFR-104K
Fan Removal Adaptor Kit for Wind Turbines

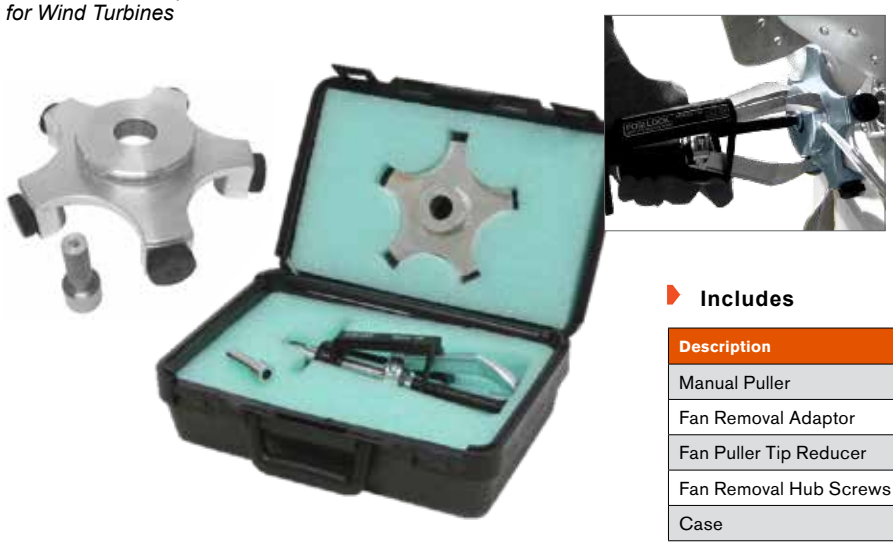

Includes

Description	Part #
Manual Puller	PT104
Fan Removal Adaptor	PTFR104
Fan Puller Tip Reducer	PTX4F
Fan Removal Hub Screws (5)	PTFR-60
Case	—

Model Shown:
PTPHB-116,
PTPHB-110





Features

KNOWN FOR SAFETY, DURABILITY, AND EASE OF USE, POSI-LOCK PULLERS ARE DESIGNED TO HELP EXTEND BEARING LIFE IN APPLICATIONS THROUGH PROPER INSTALLATION, REMOVAL, AND SERVICE.

- 5 to 50-ton capacity puller with up to 14” (356 mm) reach and 25” (635 mm) spread for large pulling requirements
- 10,000 PSI (690 Bar) single-acting cylinder that allows for high tonnage repeatable execution
- Slim tapered heat-treated tips allow for better gripping and easier access in tight spots

Puller Accessories

Power Team offers accessories to compliment your puller. These accessories conveniently store, transport and position your hydraulic pullers to maximize your productivity.



Order No. Storage Transport Cart	Puller No. *
PTPT-2550	PTPHB-213
PTPT-2550	PTPHB-113
PTPT-2550	PTPHB-116



Long Jaw/Extra Long Jaw

Ordering Information

2 Jaw	3 Jaw					2 Jaw	3 Jaw	Dimensions	
Standard Jaw Order No.	Standard Jaw Order No.	Cap. Short Tons	Cylinder Included	Reach in. (mm)	Spread in. (mm)	Long Jaw/ XL Jaw Order No.	Long Jaw/ XL Jaw Order No.	Reach In. (mm)	Spread In. (mm)
PTPHB-206	PTPHB-106	5	C55C	6 (152)	.5 to 8 (13 to 203)	---	---	-	-
PTPHB-208	PTPHB-108	10	C106C	8 (203)	.75 to 12 (19 to 305)	PTPHB-208L PTPHB-208XL	PTPHB-108L PTPHB-108XL	9.8 (249) 16 (406)	15.8 (401) 22 (559)
PTPHB-210	PTPHB-110	15	C1510C	9.67 (245)	1 to 15 (25 to 38)	PTPHB-210L	PTPHB-110L	16 (406)	22 (559)
PTPHB-213	PTPHB-113	25	C2514C	12 (305)	2.5 to 18 (64 to 457)	PTPHB-213L	PTPHB-113L	20 (508)	30 (762)
---	PTPHB-116	50	C5513C	14 (356)	3 to 25 (76 to 635)	---	PTPHB-116L	26 (660)	38 (965)

Model Shown:
PTPHC-110



Features

THESE HYDRAULIC PULLERS DESIGNED TO HANDLE REMOVING JOBS WITH A MINIMAL AMOUNT OF EFFORT FOR THE ULTIMATE EFFICIENT PULLING SOLUTION.

- 5 to 50-ton capacity puller with up to 14” (356 mm) reach and 25” (635 mm) spread for large pulling requirements
- Lightweight, two-speed manually operated 10,000 PSI (690 Bar) hydraulic pump provides high oil volume for fast cylinder piston approach, then the pump automatically shifts to the high-pressure stage to move the load
- 10,000 PSI (690 Bar) single-acting cylinder that allows for high tonnage repeatable execution

Puller Accessories

Power Team offers accessories to compliment your puller. These accessories conveniently store, transport and position your hydraulic pullers to maximize your productivity.



Order No. Storage Transport Cart	Puller No. *
PTPT-2550	PTPHC-213
PTPT-2550	PTPHC-113
PTPT-2550	PTPHC-116

Included with the Kits*

- Puller Iron and Ram Point Set
- Hydraulic Cylinder
- Lift and Positioning Plate
- Two Speed Manually operated Pump
- Gauge Adapter, 10,000 PSI (690 Bar) Gauge
- 10' (3.05 m) heavy-duty Hose
- Male Coupler with dust cap

Ordering Information



Long Jaw/Extra Long Jaw

2 Jaw	3 Jaw						2 Jaw	3 Jaw	Dimensions	
Standard Jaw Order No.	Standard Jaw Order No.	Cap. Short Tons	Cylinder Included	Pump Included	Reach in. (mm)	Spread in. (mm)	Long Jaw/ XL Jaw Order No.	Long Jaw/ XL Jaw Order No.	Reach In. (mm)	Spread In. (mm)
PTPHC-206	PTPHC-106	5	C55C	P19L	6 (152)	.5 to 8 (13 to 203)	---	---	-	-
PTPHC-208	PTPHC-108	10	C106C	P19L	8 (203)	.75 to 12 (19 to 305)	PTPHC-208L PTPHC-208XL	PTPHC-108L PTPHC-108XL	9.8 (249) 16 (406)	15.8 (401) 22 (559)
PTPHC-210	PTPHC-110	15	C1510C	P59L	9.67 (245)	1 to 15 (25 to 38)	PTPHC-210L	PTPHC-110L	16 (406)	22 (559)
PTPHC-213	PTPHC-113	25	C2514C	P159	12 (305)	2.5 to 18 (64 to 457)	PTPHC-213L	PTPHC-113L	20 (508)	30 (762)
---	PTPHC-116	50	C5513C	P460	14 (356)	3 to 25 (76 to 635)	---	PTPHC-116L	26 (660)	38 (965)

Model Shown:
PTPHD-110



Features

5 TO 50-TON CAPACITY HYDRAULIC PULLERS KITS ARE AVAILABLE IN 2- OR 3-JAW MODELS AND OFFER MANY OPTIONS FOR FLEXIBILITY WITH ANY PROJECT.

- 5 to 50-ton capacity puller with up to 14” (356 mm) reach and 25” (635 mm) spread for large pulling requirements
- PE17 Series lightweight, 10,000 PSI (690 Bar) heavy-duty electric pump for reliable performance use after use
- 10,000 PSI (690 Bar) single-acting cylinder that allows for high tonnage repeatable execution

Puller Accessories

Power Team offers accessories to compliment your puller. These accessories conveniently store, transport and position your hydraulic pullers to maximize your productivity.



Order No. Storage Transport Cart	Puller No. *
PTPT-2550	PTPHD-213
PTPT-2550	PTPHD-113
PTPT-2550	PTPHD-116

Included with the Kits*

- Puller Iron and Ram Point Set
- Hydraulic Cylinder
- Lift and Positioning Plate
- 2 Stage Electric Pump
- Gauge Adapter, 10,000 PSI (690 Bar) Gauge
- 10' heavy-duty Hydraulic Hose
- Male Coupler with dust cap

Ordering Information



2 Jaw	3 Jaw						Long Jaw/Extra Long Jaw			
							2 Jaw	3 Jaw	Dimensions	
Standard Jaw Order No.*	Standard Jaw Order No.*	Cap. Short Tons	Cylinder Included	Pump Included	Reach in. (mm)	Spread in. (mm)	Long Jaw/ XL Jaw Order No.*	Long Jaw/ XL Jaw Order No.*	Reach In. (mm)	Spread In. (mm)
PTPHD-206	PTPHD-106	5	C55C	PE17	6 (152)	.5 to 8 (13 to 203)	---	---	-	-
PTPHD-208	PTPHD-108	10	C106C	PE17	8 (203)	.75 to 12 (19 to 305)	PTPHD-208L PTPHD-208XL	PTPHD-108L PTPHD-108XL	9.8 (249) 16 (406)	15.8 (401) 22 (559)
PTPHD-210	PTPHD-110	15	C1510C	PE17	9.67 (245)	1 to 15 (25 to 38)	PTPHD-210L	PTPHD-110L	16 (406)	22 (559)
PTPHD-213	PTPHD-113	25	C2514C	PE17	12 (305)	2.5 to 18 (64 to 457)	PTPHD-213L	PTPHD-113L	20 (508)	30 (762)
---	PTPHD-116	50	C5513C	PE17	14 (356)	3 to 25 (76 to 635)	---	PTPHD-116L	26 (660)	38 (965)

*Standard models supplied with 115v 50/60hz pump. For other voltage options, please contact technical support.

Model Shown:

PTPH-50T

Shown with long jaws



Features

FOR THOSE BIG JOBS, THIS 50-TON PULLER SET IS WHAT YOU NEED. JUST THINK OF THE JOBS YOU CAN DO WITH THIS PULLER WITH THE INCLUDED EASY TO MANEUVER CART THAT RAISES TO A HEIGHT OF 55” (1397 MM).

- 50-ton capacity puller with 14” (356 mm) reach and 25” (635 mm) spread for large pulling requirements
- PE17 Series lightweight, two-stage,10,000 PSI (690 Bar) heavy-duty electric pump for reliable performance use after use
- Remote jog switch with a 10’ (3 m) cords allows for additional worker safety
- 10,000 PSI (690 Bar) single-acting cylinder that allows for high tonnage repeatable execution
- Flexible mounting platform allows puller to swivel 360 degrees for easy accessibility to any project

Included with the 50 Ton Pullers

- 50-ton puller, model PTPH-116
- Standard and long jaw sets
- Ram Point Set
- PTC-50T cart
- 50-Ton Hydraulic cylinder
- 10,000 PSI (690 Bar) electric two-stage pump, remote jog switch on electric pump with 10' cord (3.05 m)
- 10' (3.05 m) hose
- Gauge, coupler
- Lift and Positioning Plate
- 6" (152 mm) and 12" (305 mm) ram extenders

Hydraulic Puller Suggestion For Selection



The maximum force exerted in tons should be 7 to 10 times the diameter of the shaft in inches; for example, a 1.5" (38 mm) diameter shaft would generally require a 15-ton puller.

Ordering Information

Model Number*	Capacity Tons	Number of Jaws	Reach	Spread	Weight of Set**	Long Jaws		
						Part Number	Reach	Spread
	Tons (kN)		in. (mm)	in. (mm)	lbs. (kg)		in. (mm)	in. (mm)
PTPH-50T	50 tons (445 kN)	3	14 in. (356 mm)	3 to 25 in. (76 to 635 mm)	320 lbs (145 kg)	PTPH-11654L	26 in. (660 mm)	2 to 38 in. (51 to 965 mm)

*Standard models supplied with 115v 50/60hz pump. For other voltage options, please contact technical support.
**Weight does not include hydraulic components due to variances in weight.

Model Shown:

PTPH-100T





Vertical 100-Ton Hydraulic Puller | PTPH-102TV

The 100-Ton vertical hydraulic puller was designed for big pulling jobs with limited jaw placement options. This two-jaw vertical puller is available with a single or double acting cylinder. This versatile puller can also be used in a suspended position.

Features

100 HYDRAULIC PULLERS PROVIDE MAXIMUM EXTRACTION FORCE IN APPLICATIONS REQUIRING HIGH FORCE REMOVAL OF LARGE PRESS FIT PARTS.

- 100-ton capacity puller with 50” (1270 mm) reach and 70” (1778 mm) spread for extra-large pulling requirements
- Hydraulic-actuated lift cart extends vertically up to 5’ (1.52 m) to align easily with project
- Lifting brackets allow the puller to be removed from the cart and lifted into workplaces
- PE55 Series lightweight, two-stage 10,000 PSI (690 Bar) heavy-duty electric pump for reliable performance use after use
- 10,000 PSI (690 Bar) single-acting 10.25” (260 mm) stroke cylinder with spring return for ease of compression and retraction. (Optional double-acting cylinder available)
- Available in 2-jaw, vertical 2-jaw, 3-jaw, or 2/3-jaw combination to allow a wide range of flexibility with any project

PosiLock Safety Insight

The PTPH-123T combination 100-ton puller transforms from a 2-jaw to a 3-jaw puller in 4 easy steps.

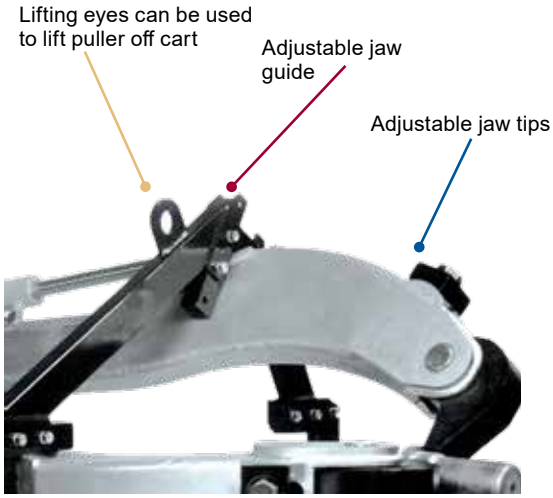

Included with the 100 Ton Pullers

- PE55 electric two-stage pump, 10,000 PSI (690 Bar)
- 100-ton cylinder 10,000 PSI (690 Bar), single acting with return spring 10.25" (260 mm) stroke (Optional double-acting cylinder available)
- Remote jog switch with 10' cord (3.05 m)
- Hydraulic-actuated lift cart extends puller from ground to a height of 5' (1.52 m)
- Multiple pushing adaptors
  1 - 3.5" diameter x 9" (89 x 229 mm)
  1 - 3.5" diameter x 19" (89 x 483 mm)
  1 - 3.5" diameter x 29" (89 x 737 mm)
  1 - Coupler
- Adjustable jaw tips and guides (Custom jaw tips available)

Technical Information

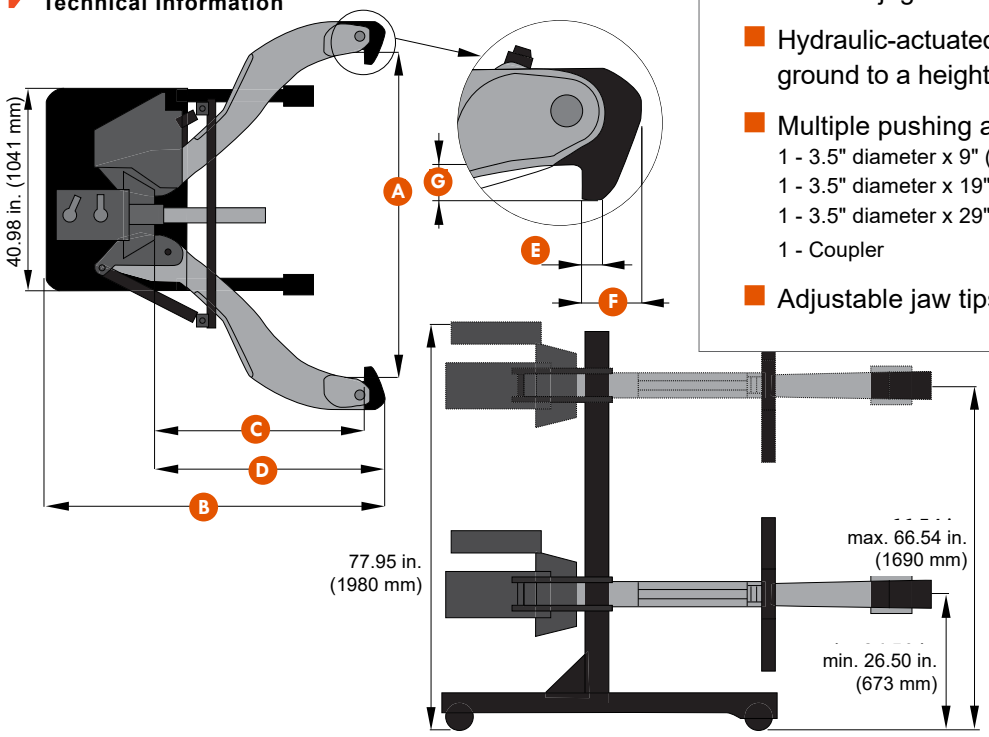

Ordering Information

Model Number*	Capacity	Number of Jaws	Dimensions							Weight
			Spread A	Overall Length B	Reach C	Jaw Length D	Jaw Tip Width E	Tip Clearance F	Tip Depth G	
	Tons (kN)		in. (mm)	in. (mm)	in. (mm)	in. (mm)	in. (mm)	in. (mm)	in. (mm)	lbs. (kg)
Single Acting										
PTPH-102T	100 tons (890 kN)	2	7.5 to 70 in. (191 to 1778 mm)	77 in. (1956 mm)	50 in. (1270 mm)	53 in. (1346 mm)	1.25 in. (32 mm)	3.5 in. (89 mm)	3.5 in. (89 mm)	1700 lbs. (771 kg)
PTPH-100T	100 tons (890 kN)	3	7.5 to 70 in. (191 to 1778 mm)	77 in. (1956 mm)	50 in. (1270 mm)	53 in. (1346 mm)	1.25 in. (32 mm)	3.5 in. (89 mm)	3.5 in. (89 mm)	1950 lbs. (885 kg)
PTPH-123T	100 tons (890 kN)	2/3	7.5 to 70 in. (191 to 1778 mm)	77 in. (1956 mm)	50 in. (1270 mm)	53 in. (1346 mm)	1.25 in. (32 mm)	3.5 in. (89 mm)	3.5 in. (89 mm)	2000 lbs. (907 kg)
Single Acting Vertical										
PTPH-102TV	100 tons (890 kN)	2	7.5 to 70 in. (191 to 1778 mm)	77 in. (1956 mm)	50 in. (1270 mm)	53 in. (1346 mm)	1.25 in. (32 mm)	3.5 in. (89 mm)	3.5 in. (89 mm)	1800 lbs. (816 kg)
Double Acting										
PTPH-102TDA	100 tons (890 kN)	2	7.5 to 70 in. (191 to 1778 mm)	77 in. (1956 mm)	50 in. (1270 mm)	53 in. (1346 mm)	1.25 in. (32 mm)	3.5 in. (89 mm)	3.5 in. (89 mm)	1800 lbs. (816 kg)
PTPH-100TDA	100 tons (890 kN)	3	7.5 to 70 in. (191 to 1778 mm)	77 in. (1956 mm)	50 in. (1270 mm)	53 in. (1346 mm)	1.25 in. (32 mm)	3.5 in. (89 mm)	3.5 in. (89 mm)	2050 lbs. (930 kg)
PTPH-123TDA	100 tons (890 kN)	2/3	7.5 to 70 in. (191 to 1778 mm)	77 in. (1956 mm)	50 in. (1270 mm)	53 in. (1346 mm)	1.25 in. (32 mm)	3.5 in. (89 mm)	3.5 in. (89 mm)	2100 lbs. (953 kg)
Double Acting Vertical										
PTPH-102DATV	100 tons (890 kN)	2	7.5 to 70 in. (191 to 1778 mm)	77 in. (1956 mm)	50 in. (1270 mm)	53 in. (1346 mm)	1.25 in. (32 mm)	3.5 in. (89 mm)	3.5 in. (89 mm)	1800 lbs. (816 kg)

*Standard models supplied with 115v 50/60hz pump. For other voltage options, please contact technical support.

Model Shown:
PTPH-200T





Features

PROVIDES ULTIMATE HYDRAULIC PULLER MUSCLE FOR THE REMOVAL OF STUBBORN GEARS, BEARINGS, AND WHEELS FROM HEAVY MINING, RAILROAD, AND CONSTRUCTION MACHINERY.

- 200-ton capacity puller with 48” (1219 mm) reach and
  70” (1778 mm) spread for extra-large pulling requirements
- PE55 Series lightweight, two-stage 10,000 PSI (690 Bar) heavy-duty electric pump for reliable performance use after use
- 10,000 PSI (690 Bar) double-acting 13.25” (337 mm) stroke cylinder for ease of compression and retraction
- Hydraulic-actuated lift cart extends vertically up to 5’ (1.52 m) to align easily with project
- Remote jog switch with a 10’ (3m) cords allows for additional worker safety

Hydraulic Puller Suggestion For Selection



The maximum force exerted in tons should be 7 to 10 times the diameter of the shaft in inches; for example, a 1.5" (38 mm) diameter shaft would generally require a 15-ton puller.

200 Ton cylinder used in this pulling application.



Technical Information

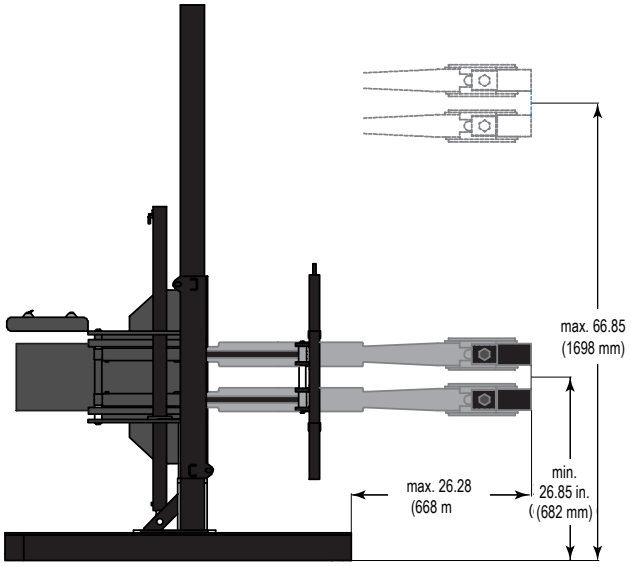

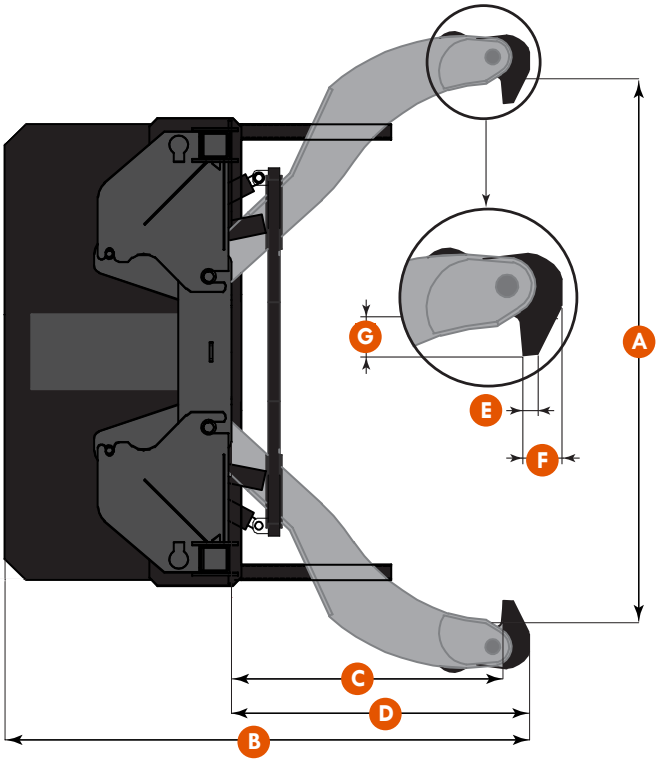

Included with the 200 Ton Pullers

- PE55 electric two-stage pump, 10,000 PSI (690 Bar)
- 200-ton cylinder 10,000 PSI (690 Bar), double acting 13.25" (337 mm) stroke
- Remote jog switch with 10' cord (3.05 m)
- Hydraulic-actuated lift cart extends puller from ground to a height of 5' (1.52 m)
- Jaws are hydraulically controlled with cylinders
- Multiple pushing adaptors
  1 - 4" diameter x 9" (102 x 229 mm)
  1 - 4" diameter x 19" (102 x 483 mm)
  1 - 4" diameter x 29" (102 x 737 mm)
  1 - 4" diameter x 39" (102 x 990 mm)
- Adjustable jaw tips and guides (Custom jaw tips available)

Optional Jaw Tips

All jaws are 3 in. (76 mm) thick.

*PTHT-1180 tips come standard with all 100 and 200-ton pullers.

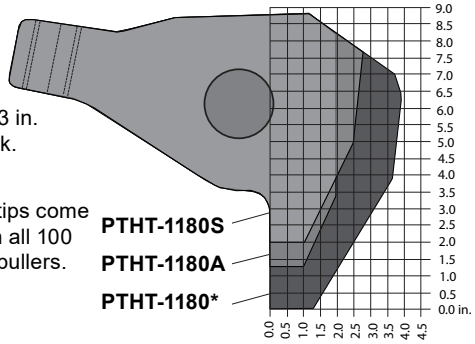

Ordering Information

Model Number*	Capacity	Number of Jaws	Dimensions							Weight
			Spread A	Overall Length B	Reach C	Jaw Length D	Jaw Tip Width E	Tip Clearance F	Tip Depth G	
	Tons (kN)		in. (mm)	in. (mm)	in. (mm)	in. (mm)	in. (mm)	in. (mm)	in. (mm)	lbs. (kg)
PTPH-200T	200 tons (1779 kN)	4	8 to 70 in. (203 to 1778 mm)	78.5 in. (1994 mm)	48 in. (1219 mm)	53 in. (1346 mm)	1.25 in. (32 mm)	3.5 in. (89 mm)	3.5 in. (89 mm)	4150 lbs. (1882 kg)

*Standard models supplied with 115v 50/60hz pump. For other voltage options, please contact technical support.

Model Shown:
PTPHS-108,
PTPHS-208



Features

THESE POWERFUL, SELF-CONTAINED PULLING SYSTEMS ARE IDEAL FOR PULLING A WIDE VARIETY OF PRESS-FIT PARTS, INCLUDING BEARINGS, GEARS, BUSHINGS, WHEELS, AND PULLEYS. YOU GET THE EASE OF A MANUAL PULLER WITH THE POWER OF HYDRAULICS.

- 108 or 208 puller assembly with standard length jaws with a reach up to 8” (203 mm) and a 12” (305 mm) spread
- Self-contained pump/cylinder with swiveling adjustable-length pump handle for ease of use at any angle
- Multiple extension rod parts that includes a 1.9" (48 mm) and two 2.9" (74 mm) extension rods with centering tips for versatility with any project
- T-handle facilitates the opening, closing, locking, and aligning of the jaws for easy operation
- Safety cage guides jaws for quick setup, providing a “vise-like” grip reducing slippage

Long Jaws



When ordering optional long jaws, extension rods should also be ordered to extend length of ram.

Ordering Information



2 Jaw	3 Jaw					Long Jaw/Extra Long Jaw			
						2 Jaw	3 Jaw	Dimensions	
Standard Jaw Order No.	Standard Jaw Order No.	Cap. Short Tons	Jaw	Reach in. (mm)	Spread in. (mm)	Long Jaw/ XL Jaw Order No.	Long Jaw/ XL Jaw Order No.	Reach In. (mm)	Spread In. (mm)
PTPHS-208	PTPHS-108	12	10854	8 (203)	.75 to 12 (19 to 305)	PTPHS-208L PTPHS-208XL	PTPHS-108L PTPHS-108XL	9.8 (249) 16 (406)	15.8 (401) 22 (559)

Model Shown:
PTPH-113IE (Internal/External)



Features

INTERNAL/EXTERNAL PULLING MADE EASY. FUNCTIONS WITH A PTPHB, PTPHC, AND PTPHD HYDRAULIC 5 TO 50-TON CAPACITY PULLERS TO ALLOW THE FLEXIBILITY OF INTERNAL OR EXTERNAL PULLING.

- External pulling up to 20” (508 mm) reach and 30” (762 mm) spread for large pulling requirements
- Internal pulling up to 7” (178 mm) reach and 21” (533 mm) spread for an effective range of internal pulling capabilities
- Safety cage houses either the internal or external jaws by simply removing the ball lock pins that allows you to change from internal to external in seconds
- Slim tapered heat-treated tips permit better gripping and easier access in tight spots

Ordering Information

Order No.	Number of Jaws	Part Number	Jaw Style	Reach in. (mm)	Spread in. (mm)	Overall Length in. (mm)	Jaw Width in. (mm)	Jaw Length in. (mm)
PTPH-113IE	3	11354T	Internal	7 (178)	8 to 21 (203 to 533)	25.75 (654)	1.25 (32)	10.9 (277)
	3	11354	External	12 (305)	2.5 to 18 (64 to 457)	27 (686)	1.25 (32)	13.7 (348)
OPTIONAL	3	11354L	External Long	20 (508)	1.5 to 30 (38 to 762)	36 (914)	1.25 (32)	21.6 (549)

Model Shown:
1024


Pulling attachment


Shaft protector


Step plate

Features

VERSATILE DESIGN OFFER A TIGHT GRIP FOR YOUR PULLING APPLICATIONS.

- Lock-Jaw™ feature on all pullers. The harder the pull, the tighter the grip for removing gears, bearings and countless other press fitted parts.
- 2-way, 3-way and 2/3-way combination pullers make it easy to select a specific puller for your application.
- Forged from high quality steel, heat treated and subjected to rigorous tests which exceed rated puller capacity.
- Forcing screw threads are rolled, not cut, creating a smoother and stronger thread.
- Heat treated alloy steel cross bolts for maximum shear strength.
- Machined puller jaw toes produce larger and stronger pulling toes.
- Meets Fed. Spec.: GGG-P-00781-D

Choosing the right size puller

Styles of puller cross heads

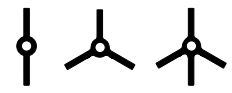

Compare the “reach” and “spread” of the pulling job with that of the pullers listed. The puller selected must have dimensions greater than those of the job.

Two-jaw head puller example.

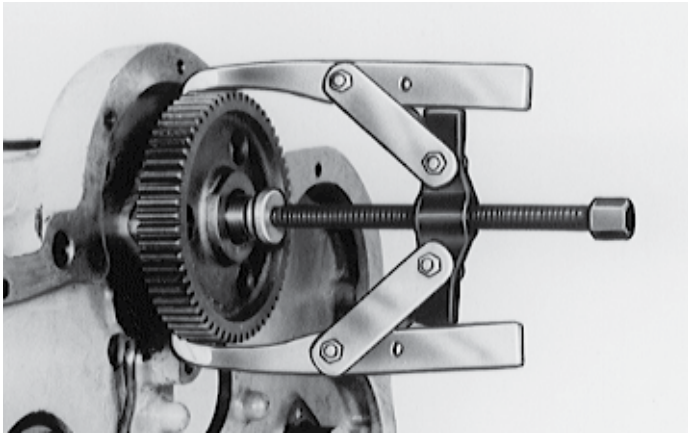

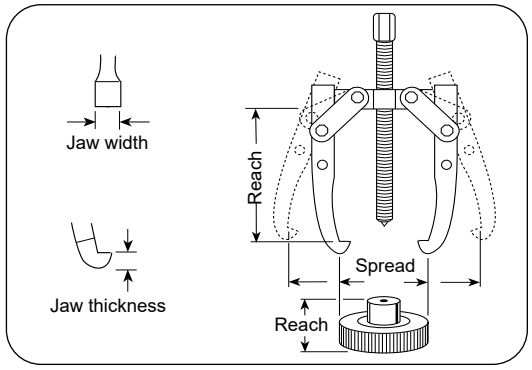

Ordering Information

	Order No.	Cap. (tons)	Jaw Type	Max. Reach (in.)	Max. Spread (in.)	Jaw Thickness (in.)	Jaw Width (in.)	Screw Size (in.)	Weight (lbs.)
 1020 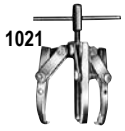 1021	1020	1	2-Jaw	2.13	3.25	0.14	0.25	5/16 - 24 x 3.88	0.31
	1021		3-Jaw	2.13	3.25				0.31
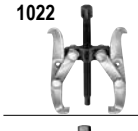 1022 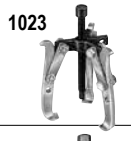 1023	1022	2	2-Jaw *	3.38	4.00	Upper 0.19 Lower 0.13	Upper 0.25 Lower 0.50	3/8 - 24 x 4.88	0.88
	1023		2/3-Jaw *	3.38	4.75				0.88
 1024 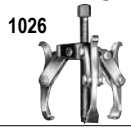 1026	1024	5	2/3-Jaw *	3.25	6.00	Upper 0.31 Lower 0.25	Upper 0.38 Lower 0.50	9/16 - 20 x 6.94	0.75
	1026		2/3-Jaw *	3.25	7.00				0.75
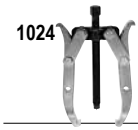 1024  1026	1025	5	Long 2-Jaw *	5.50	6.00	Upper 0.31 Lower 0.25	Upper 0.38 Lower 0.75	9/16 - 20 x 6.94	2.00
	1027		Long 2/3-Jaw *	5.50	7.00				3.63
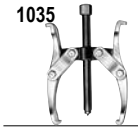 1035  1037	1035	7	2-Jaw *	5.00	9.00	Upper 0.31 Lower 0.34	Upper 1.00 Lower 1.00	11/16 - 18 x 9.00	4.50
	1037		2/3-Jaw *	5.00	10.50				6.13
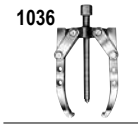 1036  1038	1036	7	Long 2-Jaw	8.75	9.50	0.34	1.00	11/16 - 18 x 9.00	5.38
	1038		Long 2/3-Jaw	8.75	11.00				8.13
 1039/1040  1041/1042	1039	13	2-Jaw	11.00	12.00	0.56	1.00	13/16 - 16 x 12.00	10.81
	1040		Long 2-Jaw	15.25	15.50				13.00
	1041		2/3-Jaw	11.00	12.00				16.25
	1042		Long 2/3-Jaw	15.25	17.00				18.75
 1043/1044  1045/1046	1043	17.5	Long 2-Jaw	14.50	14.00	0.56	1.00	1 - 14 x 13.50	23.00
	1044		Long 2-Jaw	18.75	16.00	0.81	1.28		26.00
	1045		3-Jaw	14.50	14.00				33.00
	1046		Long 3-Jaw	18.75	16.00				37.00
 1048  1050	1048	25	Long 2-Jaw	22.25	20.00	1.06	1.50	1 1/4 - 12 x 16.63	42.75
	1050		Long 3-Jaw	22.25	20.00				60.00

* Reversible Jaws

Model Shown:
927,
938,
939



Features

VERSATILE DESIGN OFFERS A TIGHT GRIP FOR YOUR PULLING APPLICATIONS.

- Can apply a pushing or pulling force, depending on how the puller is set up.
- Optional leg kits adapt your Bi-Directional™ Puller to extra long or extra short reach.
- A wide variety of threaded adapters, bearing pulling attachments and internal pulling attachments can be used in combination with our Bi-Directional™ Puller.
- Meets Fed. Spec.: GGG-P-00781-D

Selection and Capacity Rating

Each Bi-Directional™ Puller specified tonnage "capacity" is determined using its standard legs in tension. Using longer legs, or a setup in which the legs are in compression, will reduce the "capacity." Always select the largest "capacity" puller and the shortest legs that will fit the job.

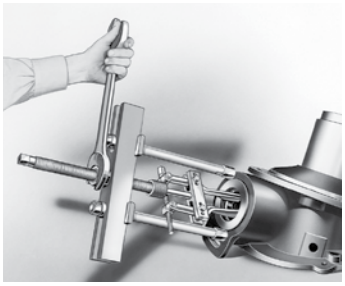

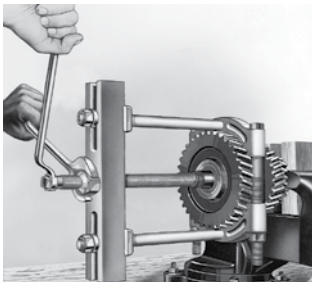

Puller Adapters


Male/Female

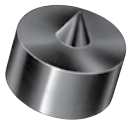
Shaft Protector


Female


Step Plate

For more information, see page 240.

ASSEMBLING THE TOOL TO APPLY PUSHING OR PULLING FORCE:

1. Determine if you want the tool's forcing screw to push or pull.
2. To exert pushing force, the forcing nut is installed beneath the cross block, as shown on left.
3. To cause the forcing screw to pull, the forcing nut is placed on top of the cross block.
4. The sliding plates must always be placed on the opposite side of the cross block from the forcing nut.

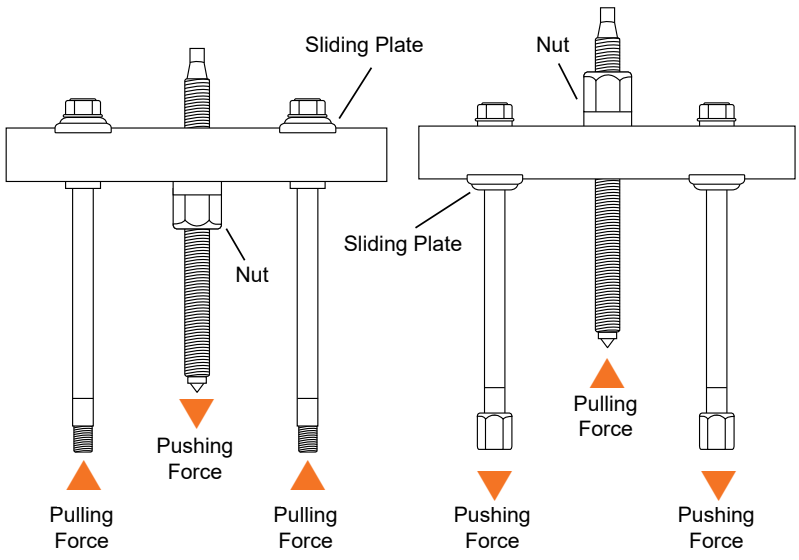

Ordering Information

10 TON MECHANICAL BI-DIRECTIONAL™

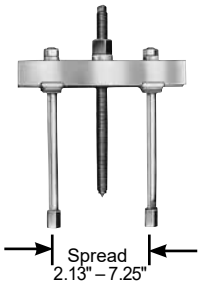

10 Ton Capacity can be used with 1123 bearing pulling attachment or 679 pulley pulling attachment. May also be used with 1150, 1151, 1152, or 1153 internal pulling attachments.

Order No.	Max. Reach (in.)	Max. Spread (in.)	Screw Size (in.)	Weight (lbs.)	Notes
927	8.25	2.13 - 7.25	3/4 - 16 x 12.00	7.00	1/2" of forcing screw tip end is threaded 5/8"–18. 1100 legs and 24827 leg ends included.

17.5 TON MECHANICAL BI-DIRECTIONAL™

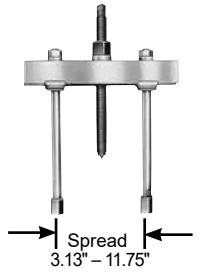

17.5 Ton Capacity can be used with 1124 and 1130 bearing pulling attachments or 679 and 680 pulley pulling attachments. May also be used with 1150, 1151, 1153, 1165, or 1166 internal pulling attachments.

Order No.	Max. Reach (in.)	Max. Spread (in.)	Screw Size (in.)	Weight (lbs.)	Notes
938	11.13	3.13 - 11.75	1 - 14 x 13.25	20.75	Leg ends threaded 5/8"–18. 1106 legs and 24827 leg ends included.

30 TON MECHANICAL BI-DIRECTIONAL™

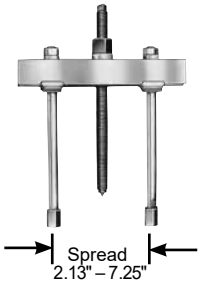

30 Ton Capacity can be used with 1126 and 1127 bearing pulling attachments or 680 pulley pulling attachment (two 8012 adapters are required to connect 680 to puller). Can be used with 1165 internal pulling attachment.

Order No.	Max. Reach (in.)	Max. Spread (in.)	Screw Size (in.)	Weight (lbs.)	Notes
939	10.50	7.00 - 16.25	1 1/2 - 12 x 17.25	44.00	Leg ends threaded 1"–14. 1109 legs and 28390 leg ends included.

ACCESSORIES - PULLER LEGS

	Order No.	Leg Length (in.)	Weight (lbs.)	
927	1103	4.75	1.00	
	1100	6.75	1.50	
	1102	11.75	2.25	
	1101	15.75	3.25	
938	1107	4.50	2.50	
	1106	9.50	4.50	

	Order No.	Leg Length (in.)	Weight (lbs.)	
938	1104	16.50	6.50	
	1105	22.50	9.00	
	1108	30.00	11.50	
939	1109	8.00	8.00	
	1110	18.00	15.00	
	1111	28.00	22.00	

BLIND HOLE PULLER SET



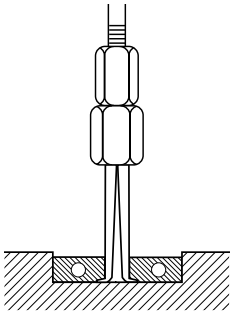

blind hole puller example

Removal of bearings, bushings, sleeves and other friction-fitted parts from blind holes can now be accomplished with ease. Set provides selection of expanding collets 5/16" to 1-3/4" I.D. Collet is placed through bore of part to be removed, then expanded with actuator pin so that lips of collet secure a positive grip for pulling. Pulling force is exerted by means of a forcing screw and bridge assembly or with a slide hammer. Equipped with a plastic case.

Order No.	Description
6981	Blind-hole puller set with slide hammer, forcing screw, bridge, actuator pins, collets, and storage box. Wt., 14.70 lbs.

CONTENTS OF 6981 SET

Order No.	Description
24835	Forcing Screw
24836	Forcing Screw Nut
22185	Hammer 2.5 lb.
2009583	Pin Adapter and Thumb Screw

Order No.	Description
2009584	Slide Hammer Rod
41331	Bridge
—	Plastic Case - 20" × 15" × 5.5"

Order No.	Description
2009585	Pin 0.140"
2009587	Pin 0.200"
2009589	Pin 0.280"
2009591	Pin 0.400"
2009593	Pin 0.500"

Order No.	Description	Reach
2009586	Collet 0.300" - 0.350"	1.50"
2009588	Collet 0.350" - 0.438"	1.50"
2009590	Collet 0.438" - 0.563"	1.75"
2009592	Collet 0.563" - 0.865"	2.50"
2009594	Collet 0.865" - 1.250"	3.00"

SLIDE HAMMER PULLER SET



This very handy set is ideal for close-quarters, inside pulling jobs. The slide hammer puller set is very practical for pulling motor, generator, and magneto bearings. It's good for removing small-bore bushings, bearings, and oil seals.

Order No.	Description
SS2	Slide hammer puller set includes both 1172 and 1174. Wt., 5.80 lbs.

Order No.	Inch Range	
	Min. (in.)	Max. (in.)
1172	0.50	2.00
1174	0.50	1.38

SLIDE HAMMER PULLER SET

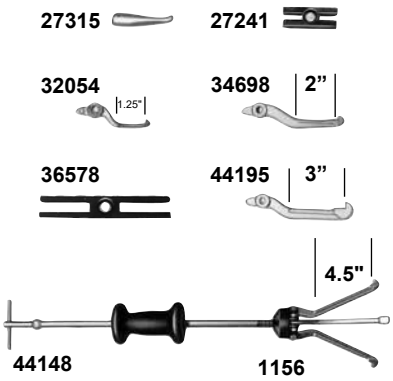

This useful set contains a reversible-jaw slide hammer puller with a 2.5 lb. sliding hammer plus an assortment of special jaws (3 of each size) and adapters. In this set, you get all the versatility you demand of a slide hammer puller.

Order No.	Description
1178	Slide hammer puller set with 2.5 lb. sliding hammer. Wt., 13.80 lbs.

Jaw Order No.	2-Jaw Spread				3-Jaw Spread			
	Inside		Outside		Inside		Outside	
	Min. (in.)	Max. (in.)	Min. (in.)	Max. (in.)	Min. (in.)	Max. (in.)	Min. (in.)	Max. (in.)
44195	1.50	4.50	0.75	5.00	1.50	4.75	1.00	4.50
32054	0.75	2.38	—	—	1.00	2.75	—	—
44148	2.75	5.50	0.75	7.50	3.25	6.25	1.00	6.50
34698	1.25	3.50	1.00	4.50	1.50	4.25	1.50	4.50

SLIDING HAMMERS ONLY

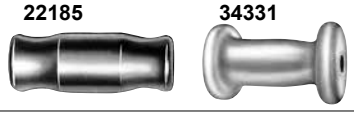

Order No.	Description
22185	2.5 lb. Sliding Hammer.
34331	5.0 lb. Sliding Hammer.

BEARING CUP REMOVER



The 7136 is perfect for pulling internal bearing cups, seals, bushings, etc. With a jaw spread of 0.94" to 3.25", and reach to 3.50". Use with any slide hammer having 5/8"-18 thread (1155, 1156 or 927 Bi-Directional™).

Order No.	Description
7136	Universal bearing cup remover. Wt., 1.50 lbs.

PILOT BEARING PULLERS



1170

These very versatile pullers are built especially for inside pulling jobs, and particularly for removing flywheel pilot bearings on machines and construction vehicles. Also very practical for pulling motor, generator and magneto bearings.

Special slide hammer puller – Ideal for pulling jobs in very close quarters, as in removal of small-bore bushings, bearings, oil seals, etc. Internal pulling attachment has jaw spread of 0.5" to 1.38". The handle end has a 1/2"– 20 thread.

Order No.	Description
1173	Slide hammer puller. Wt., 3.50 lbs.
1174	Puller head, less slide hammer. Wt., 0.80 lb.

Order No.	Reach (in.)	I.D. Spread Min. (in.)	I.D. Spread Max. (in.)	Weight (lbs.)
1170	0.75	0.50	1.50	4.90
1171	1.00	0.88	2.13	4.90
1172	1.75	0.50	2.00	4.90

BASIC SLIDE HAMMER UNITS



1155



1156

Compatible with internal pulling attachment and compatible with threaded adapters. 24" in length, 5/8"–18 threaded end.

Order No.	Description
1155	Basic slide hammer unit with 5.0 lb. hammer. Wt., 7.30 lbs.
1156	Basic slide hammer unit with 2.5 lb. hammer. Wt., 4.80 lbs.

REVERSIBLE-JAW SLIDE HAMMER PULLERS



1176



1177

Ideal for pulling gears, bearings, outer races, grease retainers, oil seals, etc. Two or three jaws may be used and positioned for "inside" or "outside" pulling jobs. Both have 5/8"– 18 threaded end so attachments and adapters may be used.

Order No.	Description
1176	Slide hammer puller with 2.5 lbs. hammer, 27241 two-way head and 34698 jaws.
1177	Slide hammer puller with 5.0 lbs. hammer, 27241 two-way head and 34698 jaws.

Jaw Order No.	2-Jaw Spread Inside Min. (in.)	2-Jaw Spread Inside Max. (in.)	2-Jaw Spread Outside Min. (in.)	2-Jaw Spread Outside Max. (in.)	3-Jaw Spread Inside Min. (in.)	3-Jaw Spread Inside Max. (in.)	3-Jaw Spread Outside Min. (in.)	3-Jaw Spread Outside Max. (in.)	Length (in.)	Prod. Wt. (lbs.)
1176	1.25	3.50	1.00	4.50	1.50	4.50	1.50	4.50	27.00	8.00
1177	1.25	3.50	1.00	4.50	1.50	4.50	1.50	4.50	27.00	10.50



Jaws Reversed

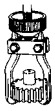

2-Jaw Spread



3-Jaw Spread

SLIDE HAMMER PULLERS WITH CUP PULLING ATTACHMENTS



1158

These combine a basic slide hammer with 1152 internal pulling attachment for removing oil seals, outer races, and bearing cups from blind holes.

Order No.	Description	Reach (in.)	Spread Min. (in.)	Spread Max. (in.)	Length (in.)	Prod. Wt. (lbs.)
1157	Slide hammer puller consisting of 1156 slide hammer and 1152 internal pulling attachment.	4.00	1.50	6.00	28.00	9.80
1158	Slide hammer puller consisting of 1155 slide hammer and 1152 internal pulling attachment.	4.00	1.50	6.00	28.00	12.30

Model Shown:
PH303C, PH63C, HST11S, PH82K

PH63C



PH303C





HST11S

PH82K









Features

SELF CONTAINED PULLER SYSTEMS ENABLES FAST AND QUICK SETUP

- Power Team pullers are tested for top performance and reliability at maximum capacity and jaw spread.
- Easily metered release valve control knob.
- Spring loaded live centering cone.
- Bladder type oil reservoir.
- Rapid adjustment.
- Use with 2 or 3-jaws.
- Supplied with a sturdy storage/carrying case.
- Features Power Team's exclusive PowerThon™ Limited Lifetime Warranty.

HYDRA LOCK-JAW™ PULLING SYSTEM

These pullers are ideal for pulling a wide variety of press-fitted parts including bushings, bearings, wheels, gears and pulleys. Hydra Lock-Jaw™ pullers have been rigorously tested for top performance and reliability. PH82K is a complete pulling system which includes a hydraulic power module, 2-way puller head, jaws, legs and bearing splitter attachment, all contained in a convenient carrying case.

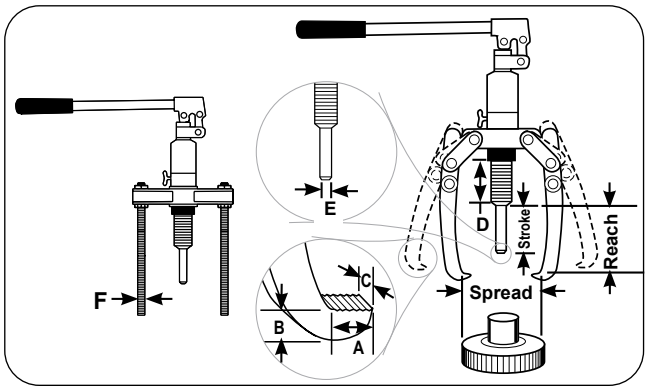

Pullers

Ordering Information

Order No.	Cyl. Cap. (ton)	Reach Studs (in.)	Min. Jaws (in.)	Max. Reach (in.)	Spread Studs (in.)	Jaws (in.)	Stroke (in.)	A (in.)	B (in.)	C (in.)	D (in.)	E (in.)	F (in.)	Weight (lbs.)
PH63C	6	—	6.00	—	—	7.88	3.13	0.44	0.25	0.88	3.25	0.88	—	10.80
PH83C	8	—	7.50	—	—	9.81	3.13	0.44	0.38	1.00	3.25	1.13	—	14.50
PH113C	15	—	9.00	—	—	11.00	3.13	0.56	0.38	1.13	3.25	1.13	—	17.60
PH303C	30	10.50	14.75	—	—	21.25	3.13	1.06	1.44	0.50	6.69	2.13	5/8-18 UNF	112.00
PH82K	8	10.50	8.16	4.91	11.80	9.91	3.13	0.36	1.00	0.63	3.25	0.88	5/8-18 UNF	35.00
HST11S*	11	—	5.91	—	—	16.13	3.13	—	—	—	3.25	0.88	—	32.00

* Max bar size 2.3622"

LOCK-JAW™ PULLER ACCESSORY KITS FOR THE HYDRA LOCK-JAW™ PULLER NO. PH83C



Order No.	Description
K82	Accessory kit for the Hydra Lock-Jaw™ puller PH83C. Includes 2-way puller head, 2-jaws, 2 threaded legs and sturdy carrying/storage case. Wt. 13.70 lbs.

LOCK-JAW™ PULLER ACCESSORY KITS FOR THE PH83C LOCK-JAW™ HYDRAULIC PULLER



Order No.	Description
K83	Accessory kit for PH83C Hydra Lock-Jaw™ hydraulic puller. Includes 2/3-way puller head, 3-jaws, 3 threaded legs (5/8-18 thread) and sturdy carrying/storage case. Also can be used with 1123, 1124, 1130 pulling attachments. Wt. 23.00 lbs.

PULLER ACCESSORY CONVERTS PH113C INTO A HYDRAULIC STRAIGHTENING TOOL

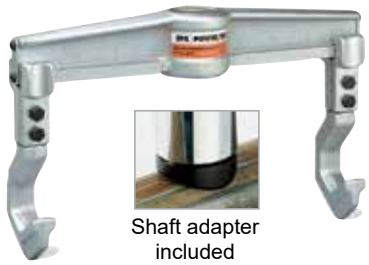

Shaft adapter included

Good for straightening mechanical shafts, round bars, etc. Simply remove pump and cylinder from puller head and insert them into the straightening tool accessory. This product is widely used in steel mills, wire roll companies, wire extruding companies, textile industry, and any straightening situation where portability and power are required. Contoured heat-treated shaft adapter included.

Order No.	Description
HST11	Spread: 3.50" to 16.13", Reach: 5.91". Wt., 21.00 lbs.

LONG JAW SET FOR PH83C AND PH113C LOCK-JAW™ PULLERS



This long jaw set is the perfect addition to the PH83C or PH113C Lock-Jaw™ hydraulic pullers. The extra long jaws give you the added capability of pulling a wider variety of parts. Jaw capacity is 8 tons when used with the PH83C puller; 15 tons when used with the PH113C puller.

Order No.	Description
1188	Spread: 11.00" to 12.50", Reach: 12.50". Wt. 11.50 lbs.

Return to Top

Model Shown:
PH53CR,
PH172,
PH303



Features

REMOVE GEARS, BEARINGS, AND OTHER PRESS-FITTED PARTS WITH SPEED AND EASE.

- Broad capacity range of 5, 10, 17.5, 30 and 50 tons.
- 5 and 10 ton sets include: single-acting, spring return hydraulic cylinder, hose, coupler dust cap, single-speed hydraulic hand pump, and puller.
- 17.5, 30 and 50 tons sets include: Power-Twin® single-acting, spring return hydraulic cylinder, hose, coupler dust cap, single-speed hydraulic hand pump puller, adjusting screw and crank.
- Hydraulic cylinder of all models is readily removable from puller for use with pump in other hydraulic applications. You get maximum maintenance versatility for your investment.
- Fed. Spec.: GGG-P-00781-D

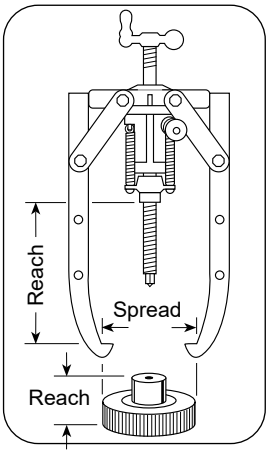

⚠ CAUTION: Always use a 3-jaw puller where clearance permits in order to provide a more stable setup and a more even pulling force.

Ordering Information - Puller Only

Order No.	Cap. (ton)	Jaws	Jaw Reach (in.)	Jaw Spread (in.)	Jaw Thickness (in.)	Jaw Width (in.)	Weight (lbs.)
1057	5	2/3	8.75	11.50	0.34	0.98	7.80
1060	10	2/3	15.00	17.00	0.56	0.98	17.00
1064	17.5	2	11.50	16.00	0.81	1.28	22.00
1066	17.5	3	11.50	20.00	0.81	1.28	36.00
1074	30	3	19.44	34.00	1.13	1.63	90.00
1080	50	3	27.88	44.00	1.41	1.88	191.00

5 TON CAPACITY, 2/3-JAW PULLER



Order No.	Description
PH53C	Combination 2-jaw/3-jaw puller set. Includes 1057 5 ton puller, RPS55 hydraulic set (C55C cylinder, P12 hand pump, fittings, coupler, and 6 ft. hose), and 309874 pushing adapter. Wt., 20.00 lbs.
PH53CR	Combination 2-jaw/3-jaw puller set. Includes 1057 5 ton puller, C55C cylinder, and 309874 pushing adapter. Wt., 12.00 lbs.
1057	5 ton cap. 2-jaw/3-jaw puller only. Wt., 7.80 lbs.

AVAILABLE COMPONENTS

Order No.	Description
309874	0.63" diameter pushing adapter. (Included with PH53C and PH53CR hydraulic puller sets). Wt., 0.30 lb.
309875	0.88" diameter pushing adapter. Wt., 0.80 lb.
47997	2-way/3-way puller head. (Can be used to convert 1038 7 ton manual puller into a 5 ton hydraulic puller). Wt., 2.30 lbs.

10 TON CAPACITY, 2/3-JAW PULLER



Order No.	Description
PH103C	Combination 2-jaw/3-jaw puller, 10 ton capacity. Set includes 1060 10 ton puller, RPS1010 cylinder and pump set, and 202179 threaded adapter. Wt., 52.00 lbs.
PH103CR	Combination 2-jaw/3-jaw puller, 10 ton capacity. Set includes 1060 10 ton puller, 202179 threaded adapter, and C1010C cylinder only. (Pump and hose not included). Wt., 32.00 lbs.
1060	Combination 2-jaw/3-jaw puller only. 10 ton capacity. (Cylinder and pump set, hose, coupler, and adapter No. 202179 not included). Wt., 17.00 lbs.

NOTE: This puller may be used with any 10 ton single-acting cylinder having a 2 1/4"–14 straight collar thread.

17.5 TON CAPACITY, 2-JAW PULLER



Order No.	Description
PH172	2-jaw puller with RT172 center-hole Power-Twin® cylinder, cylinder half coupler, P55 pump, 6-ft. hose, hose half coupler, 1"– 8 x 20" long adjusting screw, and adjusting crank. Wt., 61.00 lbs.
1064	Puller only. (Cylinder, pump, hose, coupler, screw, and crank not included). Wt., 22.00 lbs.

17.5 TON CAPACITY, 3-JAW PULLER



Order No.	Description
PH173	3-jaw puller with RT172 center-hole Power-Twin® cylinder, cylinder half coupler, P55 pump, 6-ft. hose, hose half coupler, 1"– 8 x 20" long adjusting screw, and adjusting crank. Wt., 75.00 lbs.
PH173R	3-jaw puller with screw and crank, and RT172 center-hole twin cylinder. Wt., 56.00 lbs.
1066	Puller only. (Cylinder, pump, hose, coupler, screw, and crank not included). Wt., 36.00 lbs.

30 TON CAPACITY, 3-JAW PULLER



Order No.	Description
PH303	3-jaw puller with RT302 center-hole Power-Twin® cylinder, cylinder half coupler, P55 pump, 6-ft. hose, hose half coupler, 1 1/4"– 7 x 24" large adjusting screw, and adjusting crank. Wt., 149.00 lbs.
PH303R	3-jaw puller with screw and crank, and RT302 center-hole twin cylinder. Wt., 130.00 lbs.
1074	Puller only. (Cylinder, pump, hose, coupler, screw, and crank not included). Wt., 90.00 lbs.

50 TON CAPACITY, 3-JAW PULLER



Order No.	Description
PH503	3-jaw puller with RT503 center-hole Power-Twin® cylinder, cylinder half coupler, P55 pump, 6-ft. hose, hose half coupler, 1 5/8"– 5 1/2 x 30.38" long adjusting screw, and adjusting crank. Wt., 286.00 lbs.
1080	3-jaw puller only. (Cylinder, pump, hose, coupler, screw, and crank not included). Wt., 191.00 lbs.

Model Shown:
PPH50



Features

THE POWER TO MAKE IMPOSSIBLE JOBS BECOME ROUTINE.

- Can apply a hydraulic pushing or pulling force, depending on how the puller is set up.
- Each unit includes perfectly matched hydraulic components that can be detached from the Bi-Directional™ Puller for other tasks requiring dependable power, and assuring maximum return on your investment.
- Optional leg kits adapt your Bi-Directional™ Puller to extra long or extra short reach.
- A wide variety of threaded adapters, bearing pulling attachments and internal pulling attachments can be used in combination with our Bi-Directional™ Pullers.

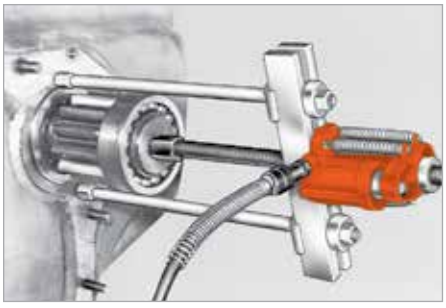



ASSEMBLING THE TOOL TO APPLY PUSHING OR PULLING FORCE:

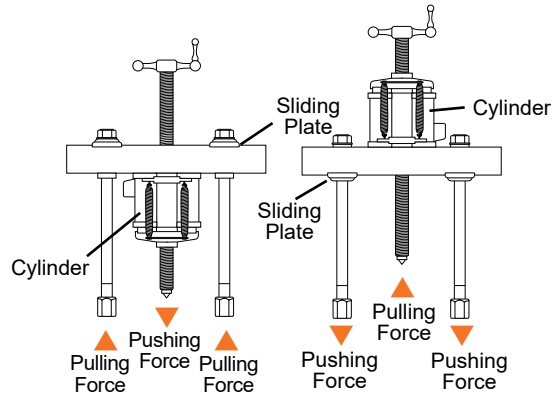

1. Determine if you want the tool's forcing screw to push or pull.
2. To exert pushing force, the forcing nut is installed beneath the cross block, as shown on left.
3. To cause the forcing screw to pull, the forcing nut is placed on top of the cross block.
4. The sliding plates must always be placed on the opposite side of the cross block from the forcing nut.

SELECTION AND CAPACITY RATING – Each Bi-Directional™ Puller's specified tonnage "capacity" is determined using its standard legs in tension. Using longer legs, or a setup in which the legs are in compression, will reduce the "capacity." Always select the largest "capacity" puller and the shortest legs that will fit the job.

POWER-TWIN® CYLINDER – This unique center-hole cylinder powers each Bi-Directional™ Puller screw runs right between the twin spring cylinder. A basic head allows you to change from a tapped hole to a plain hole by merely changing the head insert.

17.5 TON CAPACITY BI-DIRECTIONAL™ PULLER

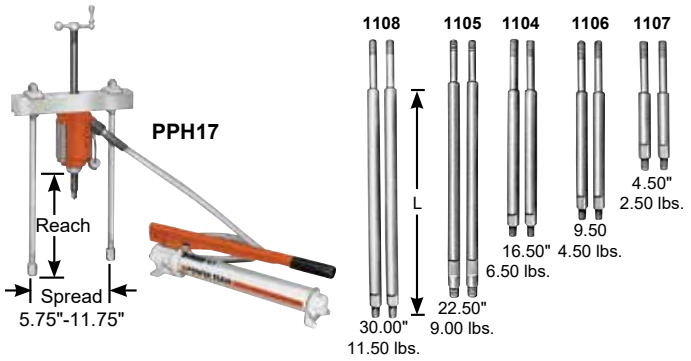

Leg Ends – Upper leg ends are threaded 3/4"-16. Lower leg ends are threaded 5/8"-18.00" long

NOTE: L = leg length: 4.50", 9.50", 16.50", 22.50", 30.00"; subtract 4.88" from leg length to determine reach when using leg end caps.

Order No.	Description
PPH17	Bi-Directional™ Puller with RT172 center-hole Power-Twin® cylinder, cylinder half coupler, P55 pump, 9767 6-ft. hose, 9798 hose half coupler, 16.50" legs, 24827 leg ends, 1"-8 x 20" large adjusting screw and adjusting crank. Wt., 59.00 lbs.
PPH17R	Bi-Directional™ Puller with RT172 center-hole Power-Twin® cylinder, cylinder half coupler, but without P55 pump, 9767 6-ft. hose and 9798 hose half coupler. Wt., 40.00 lbs.
1062	Puller only. (Cylinder, pump, hose, coupler, screw and crank not included). Wt., 20.00 lbs.

	USE WITH:
Bearing pulling attachment:	**1124 and 1130.**
Pully Pulling attachment:	**679.**
Internal Pulling attachment:	**1154.**
Legs:	**1104, 1105, 1106, 1107 and 1108** - Pair of legs for 17.5-ton "capacity" Bi-Directional™ Puller.

30 TON CAPACITY BI-DIRECTIONAL™ PULLER

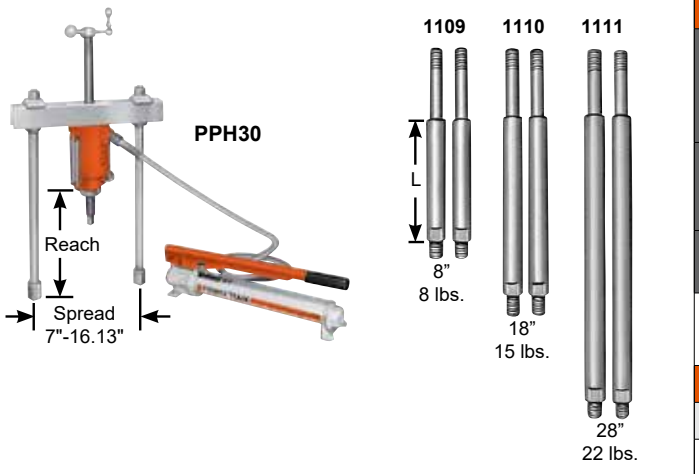

Leg Ends are threaded 1"-14 x 1.25" long

NOTE: L = leg length: 8.00", 18.00", 28.00"; subtract 5.88" from leg length to determine reach when using leg end caps.

Order No.	Description
PPH30	Bi-Directional™ Puller with RT302 center-hole Power-Twin® cylinder, cylinder half coupler, P55 pump, 9767 6-ft. hose, 9798 hose half coupler, 18" legs, 28390 leg ends, 1 1/4"-7 x 24" lg. adjusting screw and adjusting crank. Wt., 102.00 lbs.
PPH30R	Bi-Directional™ Puller with RT302 center-hole Power-Twin® cylinder, cylinder half coupler, but without P55 pump, 9767 6-ft. hose and 9798 hose half coupler. Wt., 82.00 lbs.
1070	Puller only. (Cylinder, pump, hose, coupler, screw and crank not included). Wt., 42.00 lbs.

	USE WITH:
Bearing pulling attachment:	**680** (Use two 8012 adapters to connect to puller.)
Pully Pulling attachment:	**679.**
Internal Pulling attachment:	**1166.**
Legs:	**1109, 1110 and 1111** - Pair of legs for 30 ton "capacity" Bi-Directional™ Puller.

50 TON CAPACITY BI-DIRECTIONAL™ PULLER

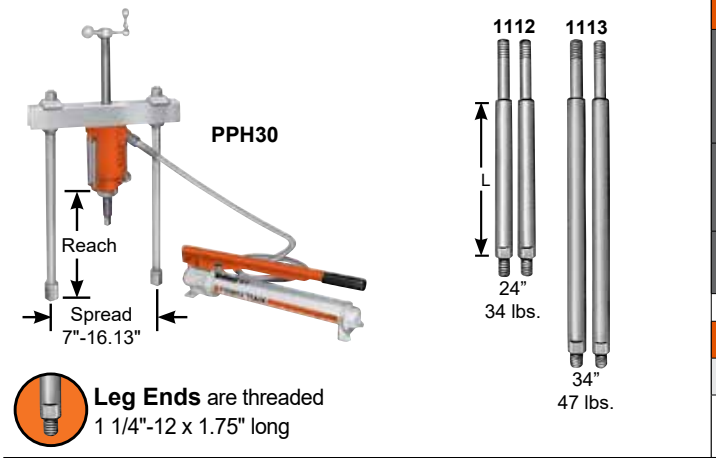

Leg Ends are threaded 1 1/4"-12 x 1.75" long

Order No.	Description
PPH50	Bi-Directional™ Puller with RT503 center-hole Power-Twin® cylinder, cylinder half coupler, P55 pump, 9767 6-ft. hose, 9798 hose half coupler, 24" legs, 1 5/8-5 1/2 x 30.38" lg. adjusting screw and adjusting crank. Wt., 201.00 lbs.
PPH50R	Bi-Directional™ Puller with RT503 center-hole Power-Twin® cylinder, cylinder half coupler, but without P55 pump, 9767 6-ft. hose and 9798 hose half coupler. Wt., 181.00 lbs.
1076	Puller only. (Cylinder, pump, hose, coupler, screw and crank not included.) Wt., 106.00 lbs.

	USE WITH:
Bearing pulling attachment:	**1128.**
Legs:	**1112 and 1113** - Pair of legs for 50 ton "capacity" Bi-Directional™ Puller.

Model Shown:
PHP8H,
PHP8R





Features

IDEAL FOR INSTALLING A WIDE VARIETY OF PRESS-FIT PARTS.

- Power Team pushers have been rigorously tested for top performance and reliability at maximum capacity.
- These pushing systems are covered by Power Team's exclusive PowerThon™ Limited Lifetime Warranty — assuring you of the highest quality and reliability.

BEARING PUSHER KITS

- Portable pushing kits include an external Lock-Jaw™ puller, an internal puller, hydraulic cylinder, and a tri-section pulling attachment, all in one compact, lightweight unit complete with carrying case.

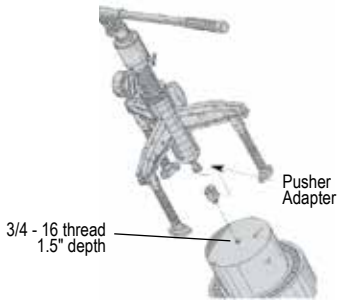

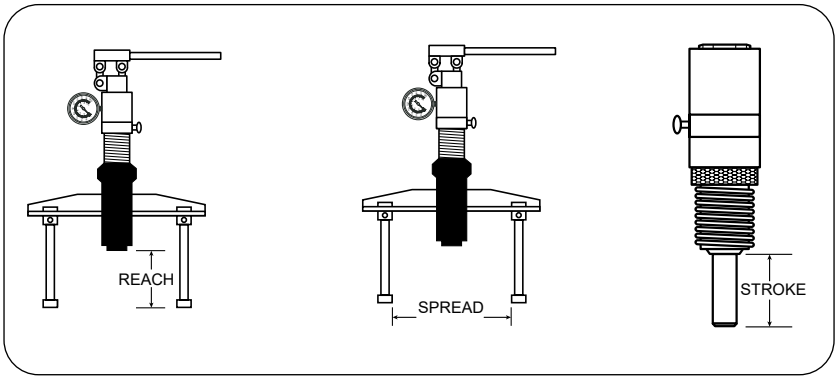

Pullers

Ordering Information

Order No.	Description	Cylinder Cap. (ton)	Reach (in.)	Spread (in.)	Stroke (in.)	Weight with Case (lbs.)
PHP8H	Manual-Hydraulic Pusher	8	2.16 - 15.16	2.28 - 10.62	3.23	74.00
PHP8H-1	Manual-Hydraulic	8	2.16 - 15.16	2.28 - 10.62	3.23	117.00

⚠ **IMPORTANT SAFETY INFORMATION:** Power Team recommends the use of protective blankets for all pushing operations. For ease of visual clarity, we have shown the pusher application photos without these safeguards.

MECHANICAL AND HYDRAULIC PULLER RETENTION BLANKET



- Made of see-through, high-tensile, tear resistant material.
- The clear retention blankets allow you to visually monitor the job from start to finish.
- Ideal for use with pullers and forcing presses.
- Unlike rigid, fixed guards, these blankets can be wrapped and strapped around a job.
- Offers additional protection for the user during dismounting jobs,
- Suitable for use in combination with many pullers.

Order No.	Size		Number of Straps	Weight	
	in.	mm.		lbs.	kg.
PB1230D	12 x 30	304 x 762	2	2.80	1.27
PB2036D	20 x 36	508 x 914	2	4.20	1.91
PB2860D	28 x 60	711 x 1524	3	9.30	4.22
PB3372D	33 x 72	838 x 1828	3	11.70	5.31
PB44120D	44 x 120	1117 x 3048	4	24.20	10.98
PB51156D	51 x 156	1295 x 3964	4	34.40	15.60

NOTE: Custom sizes are available on a special order basis. Please consult factory.

JOB-SITE AND MAINTENANCE SECURITY CHESTS

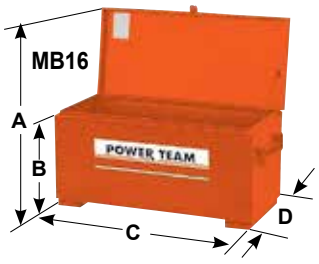

Protect your valuable tools and equipment from theft and weather. When the day's work is finished, you want to rest assured that your tools and equipment will be present the next day. These rugged, lockable chests are the answer that many of our customers have been asking for.

- Rugged, 16 gauge steel construction with fully arc welded seams for extra strength and weather protection.
- Full length piano hinges, mating cover to body, protect against weather and theft.
- Single or double latch security tabs for padlocks.
- Mechanical cover supports, two 2 1/4" high skids.
- Fold-down 3/4" pipe handles on each end of chest.
- Pre-drilled for optional casters, which enhance mobility.
- Durable baked enamel finish.

Order No.	A	B	C	D	Cap.	Storage Wt.
	(in.)	(in.)	(in.)	(in.)	(cu. ft.)	(lbs.)
MB5	34.75	14.00	32.00	19.00	5.0	66.00
MB8	39.75	19.00	42.00	19.00	8.8	90.00
MB16	49.75	24.00	48.00	24.00	16.0	126.00

Optional Accessories Caster Wheels	
251646– Set of four 4" casters (two swivel and two rigid). Furnished with mounting screws. Wt., 12.50 lbs.	
251647 – Set of four 6"casters (two swivel and two rigid). Furnished with mounting screws. Wt., 15.30 lbs.	

Model Shown:
PH553C



Features

ENFORCER 55

1. Puller can be assembled in 2 or 3-jaw configurations.
2. Hydraulically-actuated jaws allows cylinder to move in or out with a safe, secure grip on workpiece.
3. Hydraulic lift system for easy, precise position of puller.
4. Unique dual pump arrangement. Low pressure pump positions, holds and opens jaws. The high pressure pump advances and retracts the pushing cylinder without releasing clamped jaws.
5. Swivel casters give ease of mobility.
6. Large wheels make movement of cart easy.
7. Super Lock-Jaw™ feature means the harder the pull, the tighter the puller jaws grip. No chains or cages required to keep puller jaws from slipping or springing off the part being pulled.
8. Guards at pinch points protect operator.
9. Puller can be mounted on cart 90 degrees to right or left of puller cart centerline, permitting use in tight quarters, such as between machinery.
10. Self-centering design puller jaws will automatically grip work evenly.
11. Choice of cylinder with a 6.25” or 13.25” stroke.

PUSHING ADAPTERS

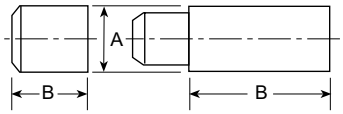

Order No.	Qty. *	A (in.)	B (in.)
251002	1	2.75	2.75
350593 **	2	2.75	6.00
350594	1	2.75	3.00
350637	1	2.75	10.00

* Number of adapters supplied with each Enforcer.

** Only 1 for units with 13.25" stroke.

⚠ IMPORTANT SAFETY INFORMATION: Power Team recommends the use of protective blankets for all pushing operations. For ease of visual clarity, we have shown the pusher application photos without these safeguards.

CONVERSION KIT

Conversion Kit No. 251468. Kit converts PH553C series to PH553CL series. Jaws are 12" longer. Kit contains three jaws and six straps with guards. Wt., 250.00 lbs.



Note: Four cylinder extensions (not pictured) are included. The included lifting eyes (not pictured) permit use of an overhead crane to raise entire assembly.

Pullers

Ordering Information

Order No.	Puller Jaw Tip A (in.)	Puller Jaw Tip B (in.)	Puller Jaw Tip C (in.)	Min. Spread (in.)	Reach Min. Spread (in.)	Max. Spread (in.)	Reach Max. Spread (in.)	Overall Length * (in.)	Cyl. Stroke (in.)	Power Source Requirements (in.)	Prod. Wt. (lbs.)
PH553C	0.88	1.25	1.88	4.00	22.00	48.00	14.00	90.00	6.25	115 V, 60Hz, 25 Amp Cap.	749.00
PH553C13	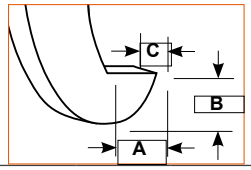			4.00	15.00	48.00	7.00	90.00	13.25	115V, 60Hz, 25 Amp Cap.	776.00
PH553CL13				2.50	25.63	45.25	22.00	102.00	13.25	115V, 60Hz, 25 Amp Cap.	836.00
PH553C-230				4.00	22.00	48.00	14.00	90.00	6.25	230V, 50/60Hz, 15 Amp Cap.	749.00
PH553C13-230				4.00	15.00	48.00	7.00	90.00	13.25	230V, 50/60Hz, 15 Amp Cap.	776.00
PH553CL-230				2.50	32.63	45.25	29.00	102.00	6.25	230V, 50/60Hz, 15 Amp Cap.	809.00
PH553CL13-230				2.50	25.63	45.25	22.00	102.00	13.25	230V, 50/60Hz, 15 Amp Cap.	836.00

* Cart and Puller (cart width = 32.00")

Model Shown:
PH1002



Features

ENFORCER 100

1. Adjustable jaws mean they always pull on a flat surface. Retaining chain holds jaws in place during positioning.
2. Lock-Jaw™ feature means jaws grip progressively tighter as more pulling force is applied.
3. 100 ton hydraulic cylinder is single-acting, spring return type with a maximum working pressure of 10,000 psi.
4. Lifting bracket allows puller to be lifted if the workpiece center is more than 36" off the floor.
5. Adjusting screw allows operator to move vertical position of the puller.
6. Spring loaded feature means Enforcer 100 will align itself on uneven pulls.
7. Hydraulic pump is a 2-stage, high pressure unit controlled by remote hand switch with 25 foot cord.
8. Tow bar provides puller with plenty of mobility.
9. Pushing adapters have a diameter of 4.13" and 2.50".



An ideal puller for steel mills, mines, oil fields, utility projects, paper mills, construction sites, railroads, airline shops, shipyards or anywhere else where large equipment and machinery pose tough maintenance challenges.

RAM EXTENSIONS

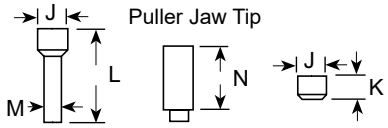

Order No.	Adapter Type	Amount included w/puller	J (in.)	K (in.)	L (in.)	M (in.)	N (in.)
44745	Push	1	4.13	—	13.50	2.50	—
44766	Ext.	4	4.13	—	—	—	8.00
303045	Push	1	4.13	3.50	—	—	—

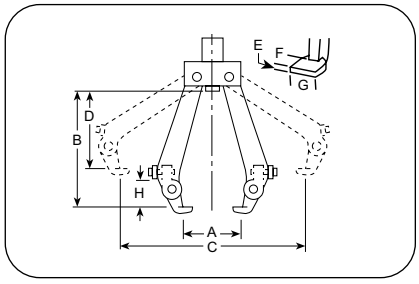

"ENFORCER 100" UNIVERSAL PULLER

Order No.	Description
PH1002	100 ton, 2-jaw universal hydraulic puller. Includes: 2-jaw Lock-Jaw™ puller, PE552S 2-speed electric/hydraulic power unit, C10010C 100 ton hydraulic cylinder with 10.25" stroke and six adapters. Wt., 890 lbs.
PH1002J	100 ton, 2-jaw universal hydraulic puller. Includes: 2-jaw Lock-Jaw™ puller, but without hydraulic power unit., C10010C 100 ton hydraulic cylinder with 10.25" stroke and six adapters. Wt., 825 lbs.
PE552S	Pump only. 1 1/8 hp, 115VAC, 50/60Hz, single-phase, draws 25 amps at full load. Also available in 220VAC, 50Hz.

NOTE: For 220VAC, 50 Hz applications, order puller's Part No. PH1002-220

Ordering Information

Order No.	Min. Spread A (in.)	Reach Min. Spread B (in.)	Max. Spread C (in.)	Reach Max. Spread D	Puller Jaw Tip E	F	G	Max. Thick. Workpiece H (in.)	Vertical Stroke Adjust. (in.)	Overall Length (in.)	Max. Thickness Workpiece (in.)	Wheel Dia. (in.)	Power Source Requirements (in.)
PH1002 PH1002J	15.00	42.00	48.00	34.00	1.00	2.25	5.00	10.25	12 - 36	94	12	8	115VAC, 50/60Hz, 25 Amp Cap.

ROLLER BEARING PULLER / INSTALLER (RAILROAD EDITION), 100 TON

Model Shown:
PR3100J,
PR3100S



Features

UNIVERSAL RAILROAD AXLE JOURNAL ROLLER BEARING PULLER/INSTALLER.

- Quickly remove or install tapered roller bearings.
- With both sling and jack models available and two pumps to choose from, you can tailor the unit to match your needs.
- The industry standard in most wheel shops.
- Each unit will service a full line of bearings with rotating end caps, from class B thru GG.
- Designed with the cooperation of major bearing manufacturers.
- Fast, simple, one-person operation with 100-tons of pulling force provided.
- Completely portable for easy, convenient positioning and out-of-the-way storage.
- Each unit complete with a heavy-duty 100-ton hydraulic cylinder, 10,000 PSI pump with remote control solenoid valve, hydraulic pressure gauge (11543), a pulling shoe and installing tube.
- CSA certified (LR19814)



Our roller bearing pullers are ideal for replacing tough, worn-out bearings on RR freight cars.



The photo above shows the Universal Puller in position on the roller bearing assembly, which is ready for removal.

PROTECTIVE BLANKETS



Power Team has protective blankets available which may afford protection from injury to users and others should part breakage occur.

For more information, see page 242.

CAUTION

Power Team recommends the use of these blankets for all pushing, pulling, pressing, and lifting applications.

Ordering Information

Order No.	Model Type	Cylinder Type	Valve Type	H.P.	Pump Information Phase	Voltage
PR2100J †	Jack	Double-Acting	Solenoid	2 **	1	115VAC or 230VAC *
PR3100J †	Jack	Double-Acting	Solenoid	3	3	230VAC or 460VAC *
PR2100S †	Sling	Double-Acting	Solenoid	2	1	115VAC or 230VAC *
PR3100S †	Sling	Double-Acting	Solenoid	3	3	230VAC or 460VAC *

* Prewired at factory for these voltages. Other voltages available upon request.
** The 2 hp, 115VAC requires 30 amp service.
† Equipped with hydraulic pressure gauge 11543.

Tooling Ordering Information

IMPORTANT: This tooling chart applies only to standard AAR configurations for freight car applications. In order to provide adapters needed to service housing-type locomotive and passenger car bearings, as well as metric bearings, Power Team must be provided with the following information. Bearing manufacturer's name and general arrangement drawing number, size of bearing to be serviced, railroad name and location and part numbers of adapters already in your possession if you currently own a Puller/Installer.

Tool Description	Class and size of bearing assembly - TBU & SP "Metric Tooling"			
	120	130	140	150
Pulling Shoe, Insert Adapter	351830	30512	30521	30520
Guide Tube & Cap Screw Assy.	253341	253342	253343	253344
Cap Screw *	253339	253394	253339	253395
Guide Tube Adapter	212247	21247	21247	21247
Installing Tube Adapter Ring	253335	253336	253337	253338

* Screws are supplied with the guide tube and should be ordered as replacements only.

Tool Description	Class and size of bearing assembly to be serviced									
	Class B 4.25" x 8"	Class C 5" x 9"	Class D 5.50" x 10"	Class E 6" x 11"	Class EE 5.50" Axle	Class EE 6" Axle	Class F 6.50" x 12"	Class G 7" x 12"	Class G 6.50" Axle	Class GG 6.50" Axle
Pulling Shoe	**420845** is included as part of basic machine					Do No Order		420846	420846	420846
Pulling Shoe, Insert Adapter	30522	30512	30521	30520	30520	30519	30519	—	—	—
Guide Tube & Cap Screw Assy.	253313	253314	253317	253318	253316	253327	253320	253321	253319	253323
Cap Screw *	253156	253349	253308	253155	253307	253308	253310	253326	253309	253309
Guide Tube, No Adapter	23934	21248	21248	21247	21247	21247	21247	21247	21247	21247
Installing Tube	**30416** is included as part of basic machine					Do No Order		30417	30417	30417
Installing Tube Adapter Ring	21242	21258	21256-1	21255-1	21255-1	21257-1	21257-1	30586	30585	30585

* Screws are supplied with the guide tube and should be ordered as replacements only.

NOTE: Adapters listed above are for servicing the following roller bearing assemblies: Brenco "Crown-Taper", New Departure-Hyatt "Hy-Roll Taper", SKF "Expediter" and Timken "AP".

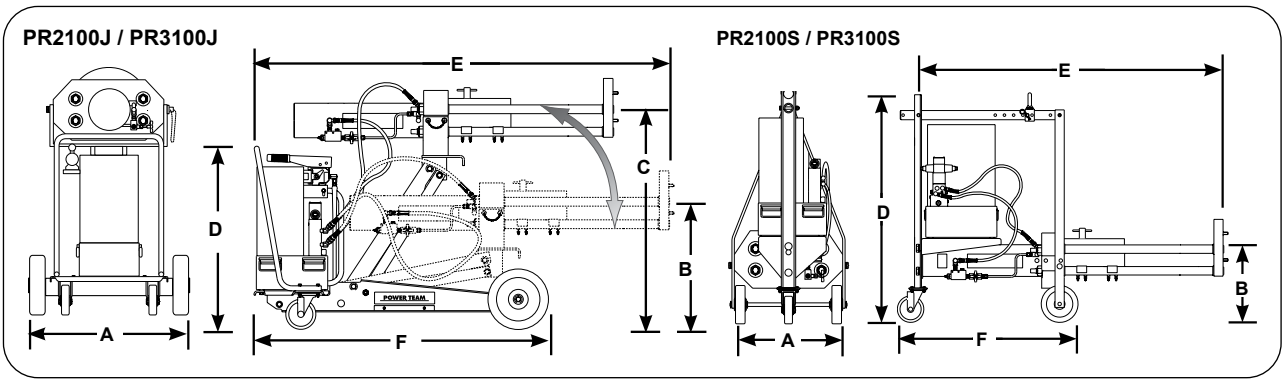

Technical Dimensions

Order No.	A	B	C	D	E	F	Stroke	Capacity		Advance	Speed		Weight
								Pull	Inst.		Pull	Inst.	
	(in.)	(in.)	(in.)	(in.)	(in.)	(in.)	(in.)	(tons)	(tons)	(in./min.)	(in./min.)	(in./min.)	(lbs.)
PR2100J	32.00	15.06	41.69	36.91	78.00	58.75	4.00	100.00	40.00	14.00	90.00	6.25	749.00
PR3100J	32.00	15.06	41.69	36.91	78.00	58.75	4.00	100.00	40.00	7.00	90.00	13.25	776.00
PR2100S	24.38	11.00	—	50.50	64.25	38.75	2.50	100.00	40.00	22.00	102.00	13.25	836.00
PR3100S	24.38	11.00	—	50.50	64.25	38.75	4.00	100.00	40.00	14.00	90.00	6.25	749.00

Model Shown:
1166



Features

RECOMMENDED FOR THE REMOVAL OF BEARINGS, BEARING CUPS, BUSHINGS AND OIL SEALS.

- Handles internal pulling jobs, such as, bearing/bearing cup removal, bushing removal, oil seals, etc.
- Remove hard to get at parts easily and without damage!
- Use with corresponding Power Team Slide Hammer or Bi-Directional™ Puller
- Adjustable jaws fit various diameters
- Meets Fed. Spec.: GGG-P-00781-D

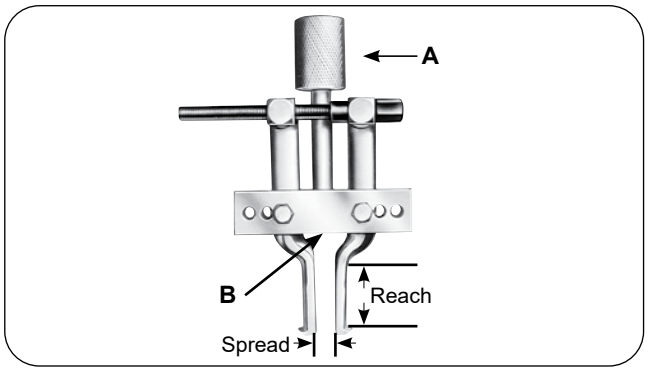

CAUTION

These attachments may not withstand the full tonnage of the pullers they are used with. The shape and condition of the part being pulled affects the tonnage at which the jaws may slip off. Always select the largest attachment which will fit behind the part being pulled.

Ordering Information

Order No.	Jaw		A	B	Weight	Application
	Spread (in.)	Reach (in.)	(in.)	(in.)	(lbs.)	
1153	1.50 - 5.00	2.13	1 - 14	5/8 - 18	4.25	Use with 927 and 938 Bi-Directional™ Puller,
1150	1.50 - 6.00	4.00	1 - 14	5/8 - 18	4.25	
1151	1.50 - 7.00	5.25	1 - 14	5/8 - 18	4.50	
1152	1.50 - 6.00	4.00	—	5/8 - 18	3.50	Use with 927 and 938 Bi-Directional™, 1155 and 1156 slide hammer pullers, or 24832 and 24833 puller screw.
1154	1.50 - 6.00	4.00	1 - 8	5/8 - 18	4.50	Use with PPH17.
1165	3.00 - 9.00	5.88	1 1/2 - 12	1 - 14	13.50	Use with 939 Bi-Directional™ Puller.
1166	3.00 - 9.00	5.88	1 1/4 - 7	1 - 14	13.50	Use with PPH30.

Order No.	Length (in.)	Puller Screws Threads (in. - thd.)	Weight (lbs.)	Application
24832	13.75" long	5/8 - 18	1 lb.	Use with 1150, 1151, 1152, and 1153. Acts as a regular forcing screw when threaded directly into block of pulling attachment.
24833	5.50" long	5/8 - 18	6 oz.	Use with 1150, 1152, and 1153. Acts as a regular forcing screw when threaded directly into block of pulling attachment.

Model Shown:
1122



Features

USED WHERE SPACE DOES NOT PERMIT, HOOKING PULLER JAWS DIRECTLY ON PART TO BE PULLED.

- "Knife-like" edges fit behind bearings and other hard-to-grip parts for easy removal, even where clearance is limited.
- Usable with both Lock-Jaw™ pullers and Bi-Directional™.
- All puller blocks are made from forged alloy steel
- Meets Fed. Spec.: GGG-P-00781-D

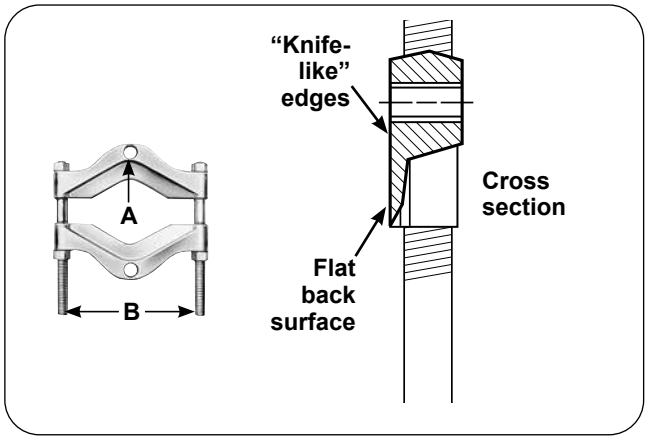

PULLING ATTACHMENT ACCESSORY

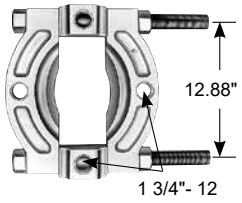

Order No.	Description
1128	"Knife-like" edges of attachment fit behind bearings or other parts for easy removal with "Enforcer 55", even if space does not permit hooking puller jaws directly to part being pulled. Spread: 5.00" to 12.88". Wt., 100 lbs.

Ordering Information

Order No.	Spread Max. (in.)	Spread Min. (in.)	A (in.)	B (in.)	Weight (lbs.)	Application
1121	0.94	0.25	5/16 - 18	1.69	0.75	1020, 1022, and 1023.
1122	2.00	0.13	3/8 - 16	2.44	1.25	1024, 1025, 1026, 1027, 7392 and 7393.
1123	4.63	0.50	5/8 - 18	4.38	5.00	1035, 1036, 1037, 1038, and 927.
1124	5.75	0.50	5/8 - 18	6.00	12.00	1035, 1040, 1041, 1042, PH172, PPH17, and 938.
1126	8.00	0.63	1 - 14	7.50	19.75	1043, and 939.
1127	13.38	0.75	1 - 14	10.25	41.75	939, PH302, and PPH30.
1128	12.88	5.00	1 3/4 - 12	13.00	100.00	PH302*, PH502*, PH553C, and PPH50. (When using 1128 with PPH50, two 8024 adapter are required to connect PPH50 to the puller tees).
1130	9.00	0.50	5/8 - 18	6.00	12.56	1035, 1040, 1041, 1042, PH172, PPH17, and 938.

V-BELT PULLEY PULLING ATTACHMENTS

Order No.	Spread Max. (in.)	Spread Min. (in.)	A (in.)	B (in.)	Weight (lbs.)	Application
679	7.88	1.75	5/8 - 18	6.00	4.25	1035, 1036, 1037, 1038, and 927.
680	10.00	1.63	5/8 - 18	10.06	22.25	1039, 1040, 1041, 1042, PH172, PPH30* and 938. (When using 680 with PPH30, two 8012 adapters are required).

* Indicates discontinued puller model.

GEAR AND PULLEY PULLERS

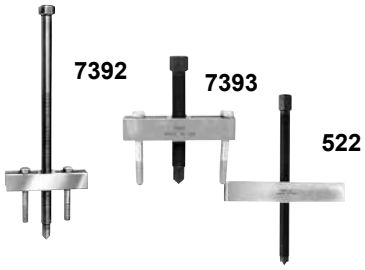

Ideal for pulling many small parts having tapped holes. The 7392 and 7393 may be used with the 1122 pulling attachment to remove bearings, etc. Pullers include two hex head cap screws, 3/8" – 16 NC x 3.00" long. Spread: 1.50" – 4.25". Width of puller block is 4.88". Cap screws are not included with the 522, but any cap screws up to 1/2" diameter may be used. The 522 spread, when used with 1/2" dia. cap screws, is 2"–7 3/4". Width of the 522 puller block is 8.25".

Order No.	Description
7392	Puller with 5/8"-18 x 13.00" long screw. Wt., 2.00 lbs.
7393	Puller with 5/8"-18 x 5.50" long screw. Wt., 1.50 lbs.
522	Puller with 3/4"-16 x 1.63" long screw. Wt., 4.30 lbs.

4-IN-1 PULLER SET



You can quickly assemble a 2 or 3-jaw puller with standard or long reach jaws.

Order No.	Description
PA7	Four-In-One puller set, 7 ton capacity. Standard jaw max. reach is 5.00". Maximum spread is 10.50". Long jaw maximum reach is 8.75". Maximum spread is 11.00". Wt., 10.80 lbs.

FLANGE TYPE PULLER



Slotted holes in puller body permit cap screws to be positioned to handle bolt-circle diameters from 1.50" - 4.63".

Order No.	Description
518	Flange type puller, includes 3 cap screws, 3/8" – 24 NF x 3.00" long and 3 cap screws 3/8" – 16 NC x 3.00" long. Forcing screw is 5/8" - 18 x 5.00" long. Wt., 3.40 lbs.

METRIC ADAPTERS



Add metric capability to the Bi-Directional™ Puller legs or forcing screws! Four separate metric kits available with a variety of sizes for the Bi-Directional™ legs or forcing screws! Each packaged in a convenient plastic organizer case.

Order No.	Description
8110	Male Metric. Wt., 3.00 lbs.
8120	Male Metric. Wt., 3.00 lbs.

CONTENTS OF 8110 SET

Order No.	Female End (in.)	Male End (in.)	Length (in.)
8111	5/8" - 18	M6 x 1.00	2.25
8112	5/8" - 18	M8 x 1.00	2.25
8113	5/8" - 18	M8 x 1.25	2.25
8114	5/8" - 18	M10 x 1.25	2.25
8115	5/8" - 18	M10 x 1.50	2.25
8116	5/8" - 18	M12 x 1.25	2.25
8117	5/8" - 18	M12 x 1.75	2.00

CONTENTS OF 8120 SET

Order No.	Female End (in.)	Male End (in.)	Length (in.)
8121	5/8" - 18	M14 x 1.50	2.25
8122	5/8" - 18	M14 x 2.00	2.25
8123	5/8" - 18	M16 x 1.50	2.75
8124	5/8" - 18	M16 x 2.00	2.75
8125	5/8" - 18	M20 x 1.50	2.75
8126	5/8" - 18	M20 x 2.50	2.75

FEMALE THREADED ADAPTERS

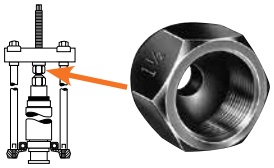

Use these adapters on the ends of Bi-Directional™ Puller forcing screws, legs, or slide hammers in the removal and installation of shafts, axles, and housings.

Order No.	Description
8044	Set No. 8044 – consists of a set of 6 adapters (8037-8042).

Order No.	Female End "A" (in.)	Female End "B" (in.)
8035 *	1/2" - 20	5/8" - 18
8036 *	1" - 14	1" x 14
8037	5/8" - 18	5/8" - 18
8038	5/8" - 18	3/4" - 16
8039	5/8" - 18	7/8" - 14

Order No.	Female End "A" (in.)	Female End "B" (in.)
8040	5/8" - 18	1" x 14
8041	5/8" - 18	1 1/8" - 12
8042	5/8" - 18	1 1/4" - 12
8043 *	5/8" - 18	1 1/2" - 12

* Not included in set No. 8044. Order separately.

NOTE: All adapters available separately.

MALE-FEMALE THREADED ADAPTERS

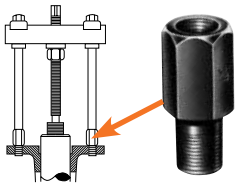

These adapters are used on ends of Bi-Directional™ Puller legs, with forcing screws or slide hammers to assist in pulling shafts, bearing caps, pinions, and many other parts.

Order No.	Female End (in.)	Male End (in.)	Length (in.)
8000	5/8" - 18	1/4" - 20	2.25
8001	5/8" - 18	5/16" - 18	2.25
8002	5/8" - 18	7/16" - 14	2.25
8003	5/8" - 18	7/16" - 20	2.25
8004	5/8" - 18	3/8" - 24	2.25
8005	5/8" - 18	3/8" - 16	2.25
8006	5/8" - 18	1/2" - 20	2.25
8007	5/8" - 18	1/2" - 13	2.25
8008	5/8" - 18	9/16" - 18	2.25
8009	5/8" - 18	9/16" - 12	2.25
8010	5/8" - 18	5/8" - 11	2.25
8011	1" - 14	5/8" - 11	2.50
8012	1" - 14	5/8" - 18	3.19
8013	5/8" - 18	3/4" - 16	2.25
8014	1" - 14	3/4" - 16	2.50

Order No.	Female End (in.)	Male End (in.)	Length (in.)
8015	5/8" - 18	3/4" - 10	2.25
8016	1" - 14	3/4" - 10	2.50
8017	5/8" - 18	7/8" - 14	2.25
8018	5/8" - 18	7/8" - 9	2.25
8019	5/8" - 18	1" - 14	2.25
8020	1" - 8	5/8" - 18	3.00
8021	1" - 8	1" - 4	3.00
8022	5/8" - 18	1/8" pipe	2.25
8023	1 1/4" - 12	1" - 14	4.50
8024	1 1/4" - 12	1 3/4" - 12	4.50
8025	1 1/4" - 7	5/8" - 18	4.00
8027	1 1/4" - 7	1" - 14	4.00
8028	1 5/8" - 5 1/2	1" - 8	4.00
8029	1 5/8" - 5 1/2	1" - 14	4.00

NOTE: Nos. 8000 - 8029 - each sold individually.

STEP PLATE ADAPTER SETS

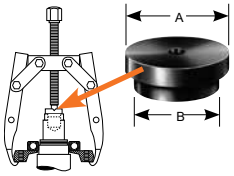

Power Team step plate adapters are necessary for pulling and installing bearings, gears, or other parts on hollow shafts or housings. Puller screw forces against step plate adapter, as shown at right. May be used with Power Team jaw-type pullers, Bi-Directional™ Pullers and shop presses.

Order No.	Description
8075	Set of 11 adapters (8057-8067).
8076	Set of 6 adapters (8068-8073).

CONTENTS OF 8075 SET

Order No.	Dia. "A" (in.)	Dia. "B" (in.)
8057	1.00	0.75
8058	1.13	0.88
8059	1.25	1.00
8060	1.38	1.13
8061	1.63	1.25
8062	1.75	1.38
8063	1.88	1.63
8064	2.00	1.63
8065	2.13	1.75
8066	2.38	1.88
8067	2.50	2.00

CONTENTS OF 8076 SET

Order No.	Dia. "A" (in.)	Dia. "B" (in.)
8068	2.63	2.13
8069	2.75	2.25
8070	2.88	2.75
8071	3.00	2.50
8072	3.25	2.75
8073	3.50	3.00

SHAFT PROTECTOR SET

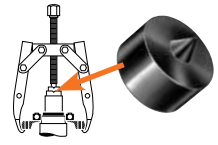

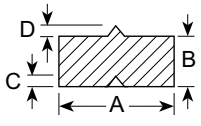

Power Team shaft protectors are designed to protect shaft centers from distortion when extreme pressures are applied with jaw-type pullers or Bi-Directional™Pullers. Shaft protectors are inserted between the end of the puller screw and the shaft.

Order No.	Description
8056	Set of 6 shaft protectors (8050 thru 8055).

CONTENTS OF 8056 SET

Order No.	Dia. "A" (in.)	Dia. "B" (in.)	"C" (60°) (in.)	"D" (60°) (in.)
8050	1.50	0.75	0.38	0.44
8051	1.25	0.75	0.38	0.38
8052	1.00	0.75	0.38	0.31

CONTENTS OF 8056 SET

Order No.	Dia. "A" (in.)	Dia. "B" (in.)	"C" (60°) (in.)	"D" (60°) (in.)
8053	0.75	0.75	0.25	0.25
8054	0.63	0.63	0.25	0.25
8055	0.63	0.63	0.19	0.19

⚠CAUTION: All the items shown may not withstand the full tonnage of the pullers they may be used with.

Return to Top

RESOURCES

GET INFORMED AND LEARN MORE ABOUT POWER TEAM PRODUCTS IN OUR RESOURCE SECTION

Power Team brings expertise to your application challenges in a variety of industries worldwide.

Within your resource section, you will have a variety of tools availability to select and capture information working around our products.

Power Team is a brand of SPX FLOW. At SPX FLOW, our work is technical, our customer's challenges are complex, and we pride ourselves on finding innovative and sustainable solutions. SPX FLOW is based in Charlotte, N.C., with operations in 25 countries and do business in more than 140 countries. Our landmark facilities are Innovation and Design Centers, which are located around the globe. These state-of-the-art collaboration labs are where we partner with leading nutrition, health and industrial manufacturers, bringing together trusted brands and technologies to meet new consumer expectations and anticipate industry trends. The result: new standards of quality, consistency and cost-effectiveness, as well as safety and sustainability.



SOLUTIONS FOR



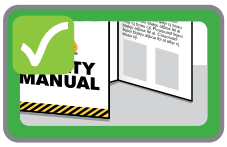



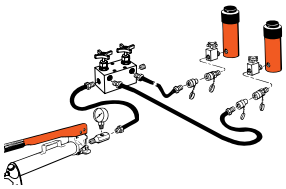

Section	Page(s)
Manufacturing Standards	267
Warranty Overview	268
Hydraulic Safety Insights	269-270
Application Insights	271-272
Hydraulic Circuits	273-274
Formula Conversions	275-276
System Arrangement Workbook	277-278
Cylinder Seal Kit Reference Table	279-280
Notes	281

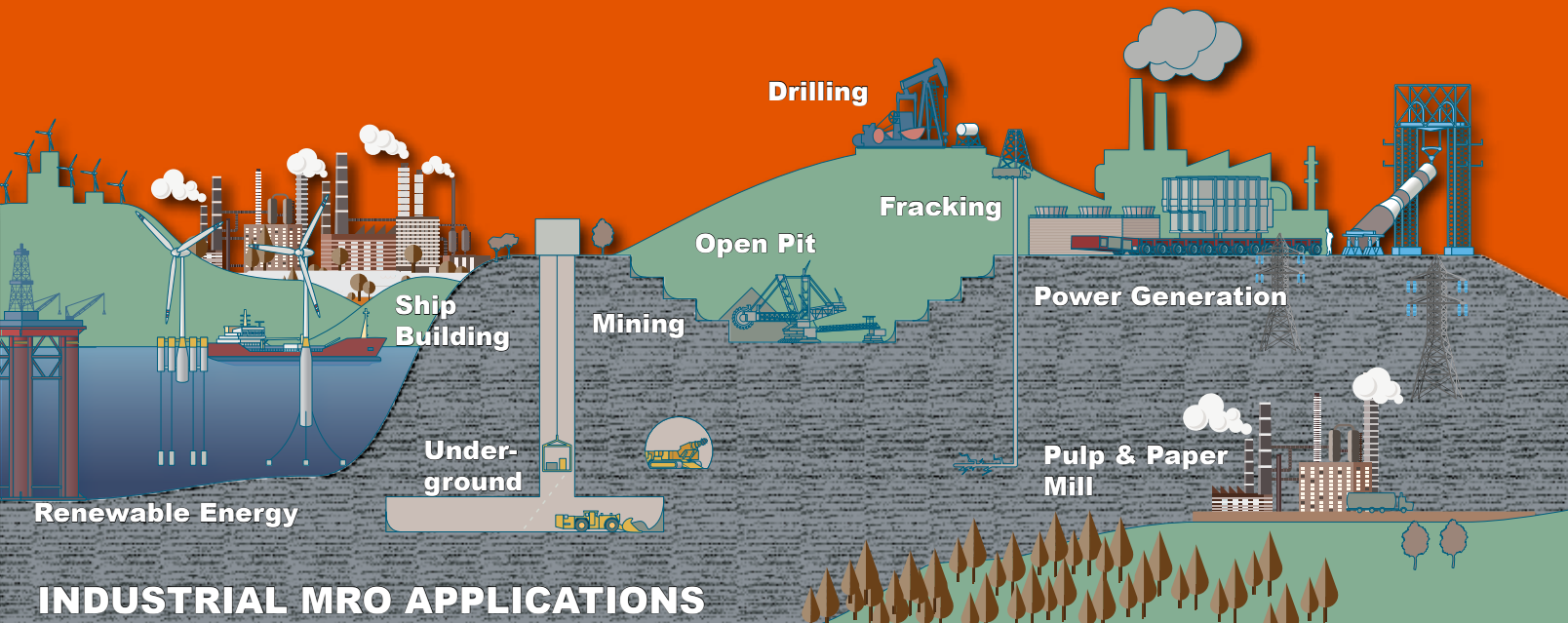

INDUSTRIAL MRO APPLICATIONS

The SPX FLOW commitment to quality, through our Power Team brand, is evident in everything we do. From raw material receipt to how we support our customers years after they purchase our products. The Power Team brand is registered to ISO 9001 international quality standard, which requires compliance with standards for management, administration, product development, manufacturing and continuous improvement. Our registration verifies that the SPX FLOW has adopted and maintains documentation for processes ranging from suppliers to customers, inspection, handling and training. ISO 9001 also requires periodic internal and external audits to ensure all aspects of work affecting quality control are monitored.

ASME B30.1
Power Team hydraulic cylinders comply with the criteria set forth in the American Society of Mechanical Engineers standard ASME B30.1: Cylinders are tested at 125 percent of rated pressure at full travel and are inspected to assure functionality and freedom from leaks.

ASME B40.1
Power Team heavy-duty pressure gauges are designed in accordance with the recommendations set forth in the American Society of Mechanical Engineers standard ASME B40.1, Grade B.

CE & UKCA Mark
SPX FLOW is committed to designing, manufacturing and marketing products that meet or exceed the needs of the customers we serve. Power Team supplies a Declaration of Conformity and the CE Marking / UKCA Marking for products that are within the scope and conform to at least one European Community CE Regulation or Directive, respectively a relevant UK Statutory Instrument. Note : Not all products are within such scope and subsequently may not be eligible to carry a CE / UKCA mark. In such cases and if a confirmation regarding the safety and/or applicability of the product is requested, please contact the factory for clarification (e.g. Manufacturer Declaration). Please note that such a request must be submitted at the time a product is ordered.

CSA
Where specified in our literature and catalogs and on our web site, Power Team electric power pump assemblies meet the design, assembly and test requirements of the Canadian Standards Association. Note: If CSA certification is required, it must be requested at the time a Power Team pump is ordered.

NEMA
Where specified in our literature and catalogs and on our web site, Power Team electric power pump assemblies meet the design, assembly and test requirements of NEMA 12, a National Electrical Manufacturers' Association standard relating to electrical components used to resist moisture and dust. Note: If NEMA certification is required, it must be requested at the time a Power Team brand pump is ordered.

Product Design Criteria
All Power Team hydraulic components are designed and/or tested to be safe for use at maximum operating pressures of 10,000 psi unless otherwise specifically noted in our literature and catalogs and on our web site.

Quality Assurance
All of Power Team hydraulic cylinders are subjected to quality checks during production. All steel bar is certified and has material traceability to the mill. Before leaving the factory, all cylinders are pressure tested to 12,500 psi, except the RT series, which are tested to 10,000 psi to insure on-the-job reliability.



"Power Team" is a registered trademark of the SPX FLOW Hydraulic Technologies division of SPX FLOW Inc. ("SPX FLOW"). All Power Team products and parts, with the exceptions noted below, are warranted against defects in materials and workmanship for the life of the product or part. (The life of the product or part is defined as that point in time when it no longer safely or properly functions due to normal wear). Chains, batteries, electric motors, gas engines, knives and cutter blades which are sold with Power Team products are not covered by this warranty and instead are warranted as follows:

- Electronics are warranted against defects in materials and workmanship for a period of one year from date of purchase.
- Consumable parts or accessories, including without limitation, chains, batteries, knives and cutter blades are warranted against defects in materials and workmanship for a period of one year from date of purchase.
- All electric motors and gas engines are separately warranted by their respective manufacturer under the terms and conditions stated in their separate warranty.

The foregoing warranties do not cover ordinary wear and tear or any product or part that has been worn out, abused, heated, ground or otherwise altered, used for a purpose other than that for which it was intended or used in a manner inconsistent with any instructions regarding its use.

To qualify for warranty consideration, return the Power Team product, freight prepaid, to a Power Team authorized repair center or to the SPX FLOW factory. If any product or part manufactured by SPX FLOW found to be defective by SPX FLOW, in its sole judgment, SPX FLOW will, at its option, either repair or replace such defective product or part and return it via best ground transportation, freight prepaid. THIS REMEDY SHALL BE THE EXCLUSIVE REMEDY AVAILABLE FOR ANY DEFECTS IN THE PRODUCTS OR PARTS MANUFACTURED AND SOLD BY SPX FLOW OR FOR DAMAGES RESULTING FROM ANY OTHER CAUSE WHATSOEVER, INCLUDING WITHOUT LIMITATION, SPX FLOW'S NEGLIGENCE. SPX FLOW SHALL NOT, IN ANY EVENT, BE LIABLE TO ANY BUYER FOR CONSEQUENTIAL OR INCIDENTAL DAMAGES OF ANY KIND, WHETHER FOR DEFECTIVE OR NON-CONFORMING GOODS, NEGLIGENCE, ON THE BASIS OF STRICT LIABILITY OR FOR ANY OTHER REASON.

SPX FLOW's PowerThon™ Warranty is expressly limited to persons who purchase Power Team products or parts for the resale or for use in the ordinary course of the buyer's business.

THIS WARRANTY IS EXCLUSIVE, AND SPX FLOW MAKES NO OTHER WARRANTY OF ANY KIND WHATSOEVER, EXPRESSED OR IMPLIED, WITH RESPECT TO THE PRODUCTS MANUFACTURED AND SOLD BY IT, WHETHER AS TO MERCHANT-ABILITY, FITNESS FOR A PARTICULAR PURPOSE, OR ANY OTHER MATTER. No agent, employee, or representative of SPX FLOW has any authority to bind SPX FLOW to any affirmation, representation, or warranty concerning Power Team products or parts, except as stated herein.

The purpose of this exclusive remedy shall be to provide the buyer with repair or replacement of products or parts manufactured by SPX FLOW found to be defective in materials or workmanship or negligently manufactured. This exclusive remedy shall not be deemed to have failed of its essential purpose so long as SPX FLOW is willing and able to replace said defective products or parts in the prescribed manner.

Any inconsistent terms contained in SPX FLOW's Standard Terms and Conditions, or other SPX FLOW terms or warranty documents shall not be interpreted to modify or limit this PowerThon™ Warranty. For the avoidance of doubt, this PowerThon™ Warranty is applicable only to Power Team products and does not apply to any other SPX FLOW products.





Wear appropriate Personal Protective Equipment (PPE).

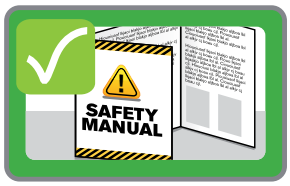

Read all instructions.



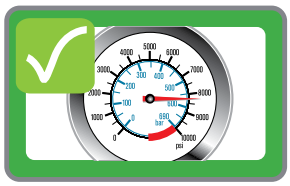

Do not exceed the rated load of any pump, tool or component.





Inspect all components before use. Do not use damaged or worn components. Return to an Authorized Repair Center for repair or replacement.

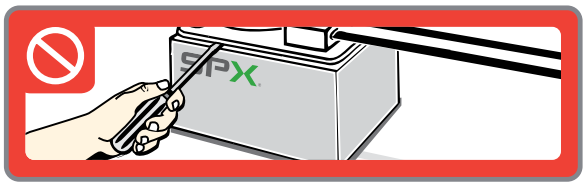

Never alter internal relief valves.



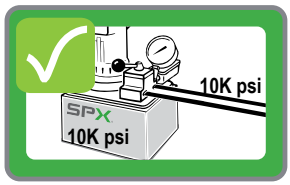

Recognize system pressures. Do not use a 10,000 PSI pump on a system with 3,000 PSI components (hoses, fittings, valves, tools, etc.).

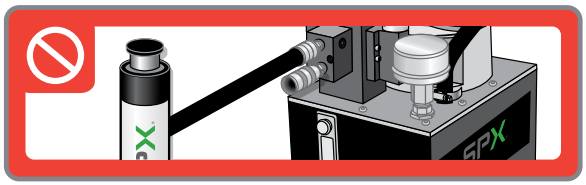

Do not use pumps designed for torque wrenches or tensioners for lifting.

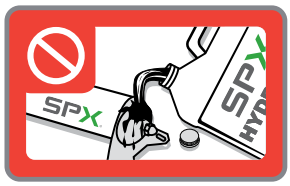



Do not overfill pump reservoirs.

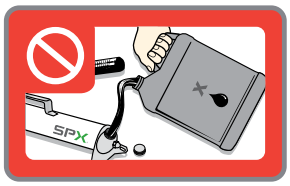



Use only high quality oil, like SPX Power Team hydraulic oil. Using the wrong fluid can lead to equipment damage and premature failure.





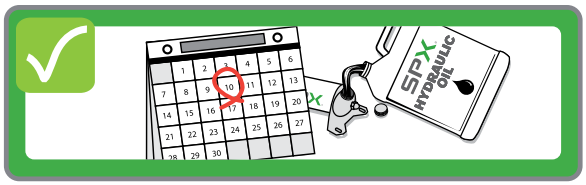

Change oil and/or filters at appropriate intervals.

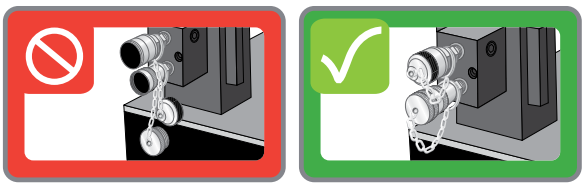

Do not operate a pump with couplers exposed or uncapped.

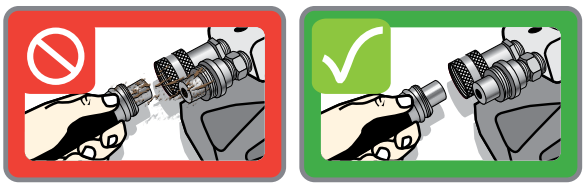

Clean both ends of the couplers before assembly.



Do not kink hydraulic hoses.

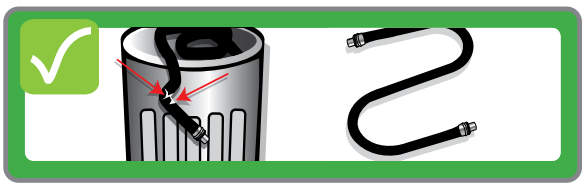

Replace damaged hoses immediately.

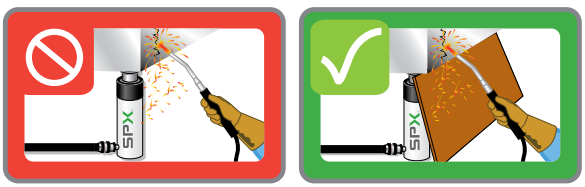

Keep equipment away from excessive temperatures. Do not weld next to unprotected equipment.

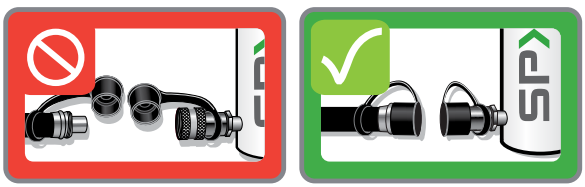

Keep couplers capped when not in use.

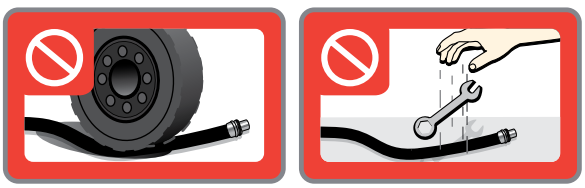

Do not drive over hoses or drop objects onto them.

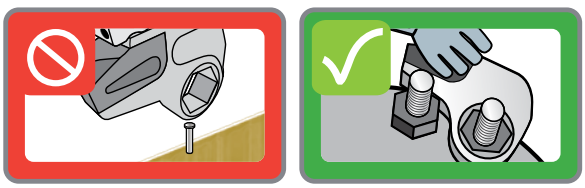

Only use tools for their intended purpose.

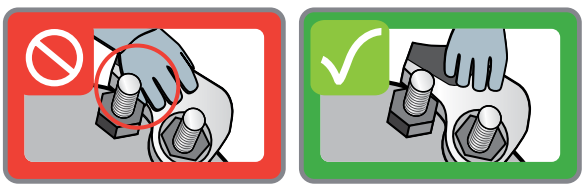

Keep hands clear of pinch points.

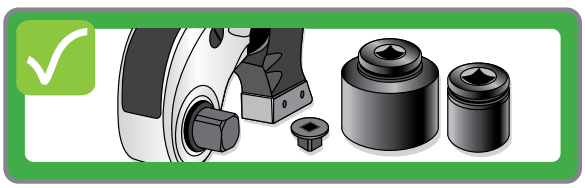

Only use high quality impact sockets and reducers with an appropriate load rating and safety factor.

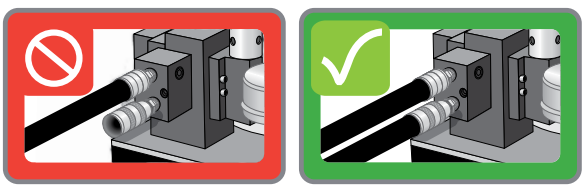

Always connect both torque wrench hoses to the pump. Do not operate with only one hose attached.



Use only the proper size sockets and links.

Application / Industry Highlight
Cement Plant, Manufacturing

Situation:
Customer asked for 100 Ton Heavy-Duty bearing puller, working with 50Hz power source with a global company. The application required removing bearings and gears in maintenance of shafts and rolling parts.

Solution:
Supplied 100T Puller # PTPH-100T-50-220





Application / Industry Highlight
Rail car Maintenance, Rail

Situation:
Customer needing a more reliable way to lift empty rail cars to install wheels. The cars are empty, but require fast speed for lifting. The standard RJ100T37E was slower than customer desired.

Solution:
RJ100T37E modified with a PE1204FR pump





Application / Industry Highlight
Shipbuilding / Repair, Transportation

Situation:
Customer manufactures propeller shafts for large military vessels (Air Craft Carriers, Destroyers, etc). Having trouble with concentricity of dissimilar metals pulling apart during welding process, they needed something to keep them clamped.

Solution:
8-PH82K pullers





Application / Industry Highlight
Construction, New Bridge Construction

Situation:
Bridge Replacement site in Raritan River, NJ to lower the multiple cofferdams. New concrete piers were installed using the cofferdams to make way for supporting the bridge. Requirements; less than 4mm tolerance from point to point during the lowering process.

Solution:
2 - 8 Point Motion Control System (MCS) consisting of 2 - 8 point skids (each with a PQ120 pump)

16-RH10010 10” 100T center hole double acting cylinders.







Application / Industry Highlight
Power Plant, Energy

Situation:
The incinerated coal is mixed with water and transported through several pipelines to the repository by very powerful pumps. These pipelines have flanges of various sizes. These flanges must be opened in certain periods and the seals must be changed.

Solution:
Hydraulic Torque Wrench set (TWHC1, TWHC3, PE55TWP-BS)





Application / Industry Highlight
Copper Mine, Mining

Situation:
Customer needed to lift this 680 Ton structure in a synchronized manner to replace the six-ton slewing bearing for this ship loader.

Solution:
Supplied one Motion Control System and 3 - 280 Ton Lock Nut Cylinders





Countless applications are possible with Power Team hydraulic components. From pressing, lifting, and jacking applications to production or maintenance setups. The diagrams are typical electric/hydraulic units. Electric, air or gas-driven pumps are available.

Single-acting cylinder or cylinders in the circuit, controlled by a pump-mounted valve.

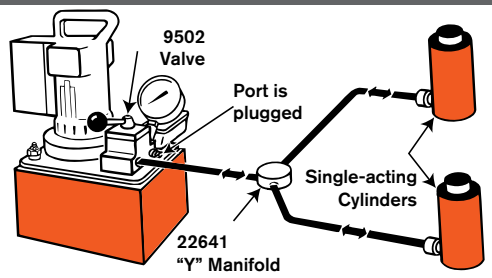

Double-acting cylinder or cylinders in the circuit, controlled by a pump-mounted valve.

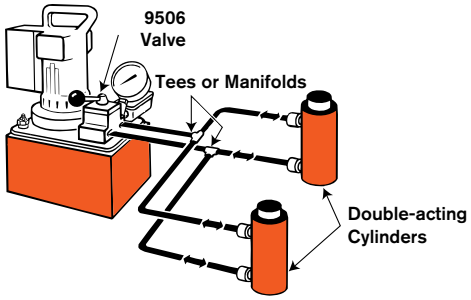

Single-acting cylinder controlled by a remote-mounted valve.

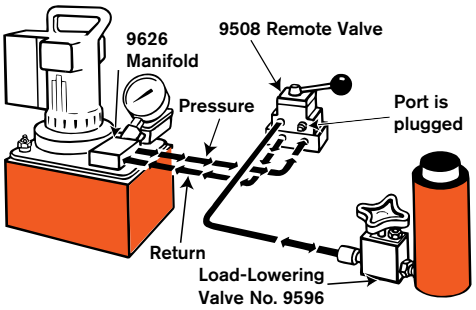

Double-acting cylinders controlled by a remote-mounted valve.

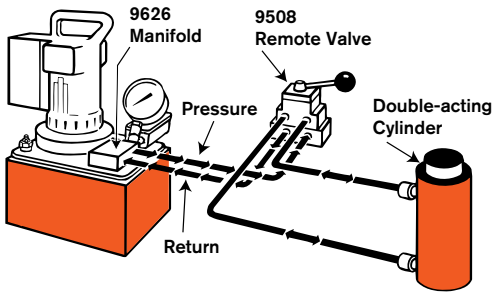

Single-acting cylinders with a sequence valve which controls the primary and secondary cylinder circuits.

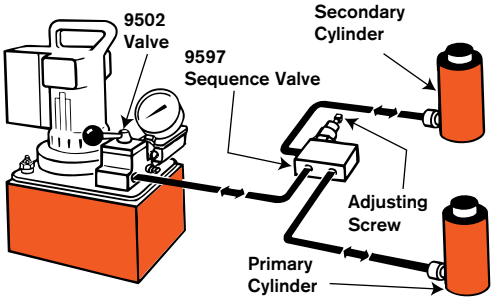

Double-acting cylinder with a sequence valve which controls the primary and secondary cylinder circuits.

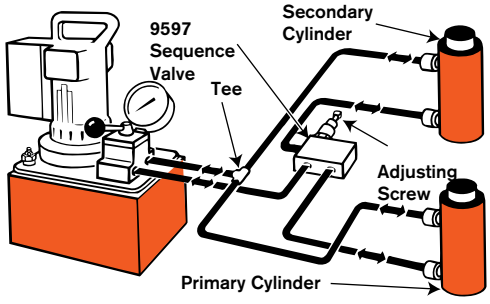

Hydraulic Circuit Components

1. **Cylinder** – applies hydraulic force.
2. **Pump** – a device for converting mechanical energy to fluid energy.
3. **Directional valve** – controls the direction of hydraulic fluid in the system.
4. **Gauge** – measures pressure (PSI - Pounds per Square Inch) and/or force.
5. **Hose** – transports hydraulic fluid.
6. **Manifold** – allows distribution of hydraulic fluid from one source to several cylinders. (9617)
7. **Swivel Connector** – allows proper alignment of valves and/or gauges. Used when units being connected cannot be rotated. (9675)
8. **Quick Coupling** – "hose half" and "cylinder half" couplings are used for quick-connection and fluid flow check when separated. (9797 and 9798)
9. **Shut-Off Valve** – regulates the flow of hydraulic fluid to or from cylinders. (9642 or 9644)
10. **Load-Lowering Valve** – allows metered lowering of cylinder and provides safety when prolonged load holding is required. (9596)
11. **T-Gauge Adapter** – allows for installation of pressure/tonnage gauge anywhere in the hydraulic system. (9670)
12. **Pipe Plug** – for blocking unused ports within the system. (9687)

Basic single-acting system with a hand pump, gauge, hose, multiple shut-off valves, load-lowering valves and multiple cylinders.

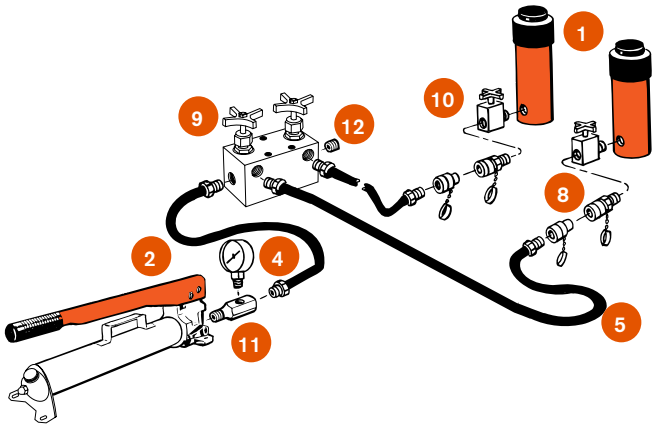

Basic double-acting system with an electric/hydraulic pump, shut-off valves, load-lowering valves and multiple double-acting cylinders.

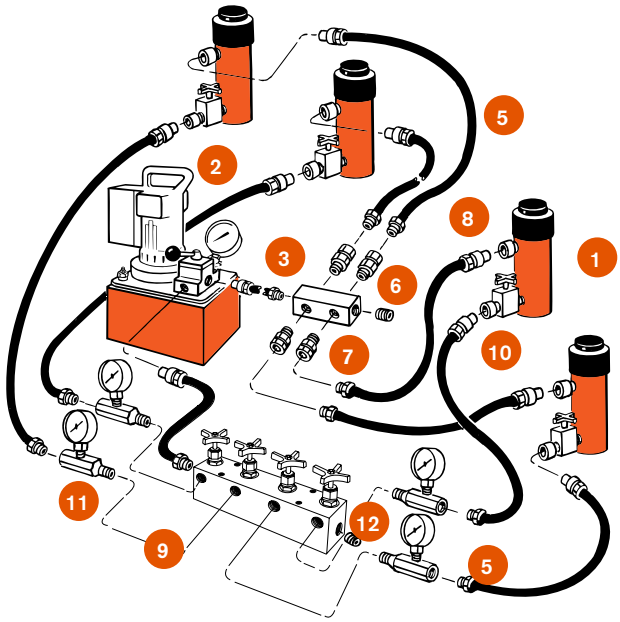

FRACTION	DECIMALS	MILLIMETERS	FRACTION	DECIMALS	MILLIMETERS
1/64	.015625	0.397	33/64	.515625	13.097
1/32	.03125	0.794	17/32	.53125	13.494
3/64	.046875	1.191	35/64	.546875	13.891
1/16	.0625	1.588	9/16	.5625	14.288
5/64	.078125	1.984	37/64	.578125	14.684
3/32	.09375	2.381	19/32	.59375	15.081
7/64	.109375	2.778	39/64	.609375	15.478
1/8	.1250	3.175	5/8	.6250	15.875
9/64	.140625	3.572	41/64	.640625	16.272
5/32	.15625	3.969	21/32	.65625	16.669
11/64	.171875	4.366	43/64	.671875	17.066
3/16	.1875	4.763	11/16	.6875	17.463
13/64	.203125	5.159	45/64	.703125	17.859
7/32	.21875	5.556	23/32	.71875	18.256
15/64	.234375	5.953	47/64	.734375	18.653
1/4	.2500	6.350	3/4	.7500	19.050
17/64	.265625	6.747	49/64	.765625	19.447
9/32	.28125	7.144	25/32	.78125	19.844
19/64	.296875	7.541	51/64	.796875	20.241
5/16	.3125	7.938	13/16	.8125	20.638
21/64	.328125	8.334	53/64	.828125	21.034
11/32	.34375	8.731	27/32	.84375	21.431
23/64	.359375	9.128	55/64	.859375	21.828
3/8	.3750	9.525	7/8	.8750	22.225
25/64	.390625	9.922	57/64	.890625	22.622
13/32	.40625	10.319	29/32	.90625	23.019
27/64	.421875	10.716	59/64	.921875	23.416
7/16	.4375	11.113	15/16	.9375	23.813
29/64	.453125	11.509	61/64	.953125	24.209
15/32	.46875	11.906	31/32	.96875	24.606
31/64	.484375	12.303	63/64	.984375	25.003
1/2	.5000	12.700	1	1.000	25.400

NOTE:
1 MM = .03937”
.001” = .0254 MM

	MULTIPLY SI* UNIT	BY CONVERSION FACTOR	TO GET OR MULTIPLY NON-SI UNIT	BY CONVERSION FACTOR	TO GET SI* UNIT
LENGTH	Millimeter (mm)	X 0.03937	= inch	X 25.4	= mm (1 inch = 25.4 mm exactly)
	Centimeter (cm) 10 mm	X 0.3937	= inch	X 2.54	= cm
	Meter (m) 1000 mm	X 3.28	= foot	X 0.305	= m
	meter (m)	X 1.09	= yard	X 0.914	= m
	kilometer (km) 1000 m	X 0.62	= mile	X 1.61	= km
AREA	millimeter^2 (mm^2)	X 0.00155	= inch^2	X 645	= mm^2
	centimeter^2 (cm^2)	X 0.155	= inch^2	X 6.45	= cm^2
	meter^2 (m^2)	X 10.8	= foot^2	X 0.0929	= m^2
	meter^2 (m^2)	X 1.2	= yard^2	X 0.836	= m^2
	hectare (ha) 10,000 m^2	X 2.47	= acre	X 0.405	= ha
	kilometer^2 (km^2)	X 0.39	= mile^2	X 2.59	= km^2
VOLUME	centimeter^3 (cm^3)	X 0.061	= inch^3	X 16.4	= cm^3
	liter (L)	X 61	= inch^3	X 0.016	= L
	milliliter (mL)	X 0.034	= oz-liq	X 29.6	= mL (1 mL = 1 cm^3)
	liter (L) 1000 mL	X 1.06	= quart	X 0.946	= L
	liter (L)	X 0.26	= Gallon	X 3.79	= L
	meter^3 (m^3) 1000 L	X 1.3	= yard^3	X 0.76	= m^3
MASS	Gram (g)	X 0.035	= ounce	X 28.3	= g
	kilogram (kg) 1000 g	X 2.2	= pound	X 0.454	= kg
	metric ton (t) 1000 kg	X 1.1	= ton (short)	X 0.907	= t
FORCE	Newton (N)	X 0.225	= pound	X 4.45	= N
	kilo-newton (kN)	X 225	= pound	X 0.00445	= kN
	newton meter (Nm)	X 8.9	= lb. in.	X 0.113	= Nm
	newton meter (Nm)	X 0.74	= lb. ft.	X 1.36	= Nm
PRESSURE	kilo-pascal (kPa)	X 4.0	= in. H_2O	X 0.249	= kPa
	kilo-pascal (kPa)	X 0.30	= in. Hg	X 3.38	= kPa
	kilo-pascal (kPa)	X 0.145	= psi	X 6.89	= kPa
	mega-pascal (MPa)	X 145	= psi	X 0.00689	= MPa
	bar	X 14.5	= psi	X 0.0680	= bar
POWER	kilowatt (kw)	X 1.34	= hp	X 0.746	= kw
	kilowatt (kw)	X 0.948	= Btu/s	X 1.055	= kw
	watt (w)	X 0.74	= ft. lb/s	X 1.36	= w
FLOW	cu cm/min	X 0.061	= cu in/min	X 16.4	= cu cm/min
	liters/min	X 0.2642	= GPM	X 3.785	= liters/min

*** SYSTEM INTERNATIONAL (MODERN METRIC SYSTEM)**

Selecting the approiate equiment for your applicaiton can be accomplished by following these three steps.

1) Understanding the "Pain Points"



2) Connect "Application" to a Function

- LIFTING
- LOWERING
- PULLING
- PUSHING
- TURNING
- CUTTING
- BENDING
- SPREADING

3) Select the correct tool for the function required



STEP 1: Determine the type of lift or tool required for your application:

- Single or multiple-point lift?
- Balanced or unbalanced load?
- Guided or unguided load?
- Pulling, pressing, punching, spreading or torquing?

STEP 2: Choose the right cylinder or tool for your specific application:

- Determine the force required. (Power Team recommends using 80% of the rated capacity and stroke to maximize product performance and safety.)
- Determine the total amount of oil required for each cylinder(s) and/or tool(s).
- Determine the closed height, stroke requirement and diameter footprint allowable.
- Push and/or pull requirement. For cylinders, single-acting, load return, spring return or double-acting hydraulically driven both ways.

STEP 3: Choose the right pump source for your application based on your cylinder /tools and oil / speed requirements:

- What is the maximum system operating pressure requirement?
- What is the volume of oil required? Add all of the cylinder(s) and/or tool(s) cubic volume requirements and add 1 cubic inch per 1.66 foot of hose.
- What is the preferred source of power? (hand, air, electric, or gas). If hand pump is selected, choose between single or two-speed.
- Do you need this to be portable? (consider weight and size).

Cylinder Order Number	Seal Kit*
C51C	300404
C53C	300404
C55C	300404
C57C	300404
C59C	300404
C101C	300116
C102C	300116
C104C	300116
C106C	300116
C108C	300116
C1010C	300116
C1012C	300116
C1014C	300116
C1016C	300116
C151C	300453
C152C	300453
C154C	300453
C156C	300453
C158C	300453
C1510C	300453
C1512C	300453
C1514C	300453
C1516C	300453
C251C	300147
C252C	300147
C254C	300147
C256C	300147
C258C	300147
C2510C	300147
C2512C	300147
C2514C	300147
C552C	300114
C554C	300114
C556C	300114
C5510C	300114
C5513C	300114
C756C	300647
C7513C	300647
C1002C	300112
C1006C	300112
C10010C	300112
C55CBT	300404
C106CBT	300116
C256CBT	300147

Cylinder Order Number	Seal Kit*
R1502C	300676
R1506C	300676
R15010C	300676
R2002C	300677
R2006C	300677
R20010C	300677
R2802C	300678
R2806C	300678
R28010C	300678
R3552C	300679
R3556C	300679
R35510C	300679
R4302C	300680
R4306C	300680
R43010C	300680
R5652C	300681
R5656C	300681
R56510C	300681
R1002D	300928
R1006D	300928
R10010D	300928
R1502D	300929
R1506D	300929
R15010D	300929
R2002D	300930
R2006D	300930
R20010D	300930
R2802D	300931
R2806D	300931
R28010D	300931
R3552D	300932
R3556D	300932
R35510D	300932
R4302D	301047
R4306D	301047
R43010D	301047
R5652D	300681
R5656D	300681
R56510D	300681
R552L	300674
R556L	300674
R5510L	300674
R1002L	300675
R1006L	300675

Cylinder Order Number	Seal Kit*
R10010L	300675
R1502L	300676
R1506L	300676
R15010L	300676
R2002L	300677
R2006L	300677
R2008L	300677
R20010L	300677
R2802L	300678
R2806L	300678
R28010L	300678
R3552L	300679
R3556L	300679
R35510L	300679
R4302L	300680
R4306L	300680
R43010L	300680
R5652L	300681
R5656L	300681
R56510L	300681
RA202	300631
RA204	300631
RA206	300631
RA302	300632
RA304	300632
RA306	300632
RA552	300391
RA554	300391
RA556	300391
RA5510	300391
RA1002	300444
RA1006	300444
RA10010	300444
RA556L	300395
RA1006L	300396
RD106	300017
RD1010	300017
RD256	300018
RD2514	300018
RD556	300005
RD5513	300005
RD5518	300005
RD8013	300410
RD1006	300120

Cylinder Order Number	Seal Kit*
RD10013	300120
RD10020	300120
RD1506	300007
RD15013	300007
RD15018	300007
RD2006	300008
RD20013	300008
RD3006	300466
RD30013	300466
RD4006	300467
RD40013	300467
RD5006	300468
RD50013	300468
RDG552	3000906
RDG554	3000906
RDG556	3000906
RDG558	3000906
RDG5510	3000906
RDG5512	3000906
RDG5513	3000906
RDG5514	3000906
RDG752	3000908
RDG754	3000908
RDG756	3000908
RDG758	3000908
RDG7510	3000908
RDG7512	3000908
RDG7513	3000908
RDG7514	3000908
RDG1002	3000876
RDG1004	3000876
RDG1006	3000876
RDG1008	3000876
RDG10010	3000876
RDG10012	3000876
RDG10013	3000876
RDG10014	3000876
RDG1502	3000881
RDG1504	3000881
RDG1506	3000881
RDG1508	3000881
RDG15010	3000881
RDG15012	3000881
RDG15013	3000881

Viton™ is an trademarks or registered trademarks of The Chemours Company

* Nitrile seals comes standard on all cylinders.

Cylinder Order Number	Seal Kit*
RDG15014	3000881
RDG2002	3000891
RDG2004	3000891
RDG2006	3000891
RDG2008	3000891
RDG20010	3000891
RDG20012	3000891
RDG20013	3000891
RDG20014	3000891
RDG2502	3000911
RDG2504	3000911
RDG2506	3000911
RDG2508	3000911
RDG25010	3000911
RDG25012	3000911
RDG25013	3000911
RDG25014	3000911
RDG3002	3000920
RDG3004	3000920
RDG3006	3000920
RDG3008	3000920
RDG30010	3000920
RDG30012	3000920
RDG30013	3000920
RDG30014	3000920
RDG4002	3000903
RDG4004	3000903
RDG4006	3000903
RDG4008	3000903
RDG40010	3000903
RDG40012	3000903
RDG40013	3000903
RDG40014	3000903
RDG5002	3000921
RDG5004	3000921
RDG5006	3000921
RDG5008	3000921
RDG50010	3000921
RDG50012	3000921
RDG50013	3000921
RDG50014	3000921
RDG6002	3000901
RDG6004	3000901
RDG6006	3000901

Cylinder Order Number	Seal Kit*
RDG6008	3000901
RDG60010	3000901
RDG60012	3000901
RDG60013	3000901
RDG60014	3000901
RGG556	3001016
RGG558	3001016
RGG5510	3001016
RGG5512	3001016
RGG5513	3001016
RGG5514	3001016
RGG752	3001049
RGG754	3001049
RGG756	3001049
RGG758	3001049
RGG7510	3001049
RGG7512	3001049
RGG7513	3001049
RGG7514	3001049
RGG1002	3001018
RGG1004	3001018
RGG1006	3001018
RGG1008	3001018
RGG10010	3001018
RGG10012	3001018
RGG10013	3001018
RGG10014	3001018
RGG1502	3001019
RGG1504	3001019
RGG1506	3001019
RGG1508	3001019
RGG15010	3001019
RGG15012	3001019
RGG15013	3001019
RGG15014	3001019
RGG2002	3001050
RGG2004	3001050
RGG2006	3001050
RGG2008	3001050
RGG20010	3001050
RDG20012	3001050
RGG20013	3001050
RGG20014	3001050
RGG2502	3001051

Cylinder Order Number	Seal Kit*
RGG2504	3001051
RGG2506	3001051
RGG2508	3001051
RGG25010	3001051
RGG25012	3001051
RGG25013	3001051
RGG25014	3001051
RGG3002	3001022
RGG3004	3001022
RGG3006	3001022
RGG3008	3001022
RGG30010	3001022
RGG30012	3001022
RGG30013	3001022
RGG30014	3001022
RGG4002	3001023
RGG4004	3001023
RGG4006	3001023
RGG4008	3001023
RGG40010	3001023
RGG40012	3001023
RGG40013	3001023
RGG40014	3001023
RGG5002	3001024
RGG5004	3001024
RGG5006	3001024
RGG5008	3001024
RGG50010	3001024
RGG50012	3001024
RGG50013	3001024
RGG50014	3001024
RGG6002	3001025
RGG6004	3001025
RGG6006	3001025
RGG6008	3001025
RGG60010	3001025
RGG60012	3001025
RGG60013	3001025
RGG60014	3001025
RH102	300071
RH108	300071
RH120	300657
RH121	300576
RH121T	300576

Cylinder Order Number	Seal Kit*
RH123	300576
RH202	300615
RH203	300069
RH206	300615
RH302	300037
RHA306	300867
RH306	300037
RH503	300059
RH603	300477
RH606	300477
RH1003	300485
RH303	300077
RH306D	300822
RH3010	300625
RHA604D	300269
RH605	300269
RH6010	300626
RH1001	300927
RH1006	300295
RH10010	300629
RH1505	300154
RH1508	300583
RH2008	300582
RLS50	300454
RLS100	300455
RLS200	300456
RLS300	300457
RLS500S	300458
RLS750S	300459
RLS1000S	300460
RLS1500S	300461
RP25	300628
RP55	300627
RSS101	300010
RSS202	300011
RSS302	300297
RSS502	300292
RSS1002	300293
RSS2503	—
RSS1002D	300578
RT172	300358
RT302	300359
RT503	300360
RT1004	300024

Viton™ is an trademarks or registered trademarks of The Chemours Company

* Nitrile seals comes standard on all cylinders.

Return to Top

POWER TEAM TECHNICAL TRAINING ACADEMY

Maintaining and repairing mining equipment can be a cumbersome task, count on Power Team Tools and Equipment to get the job done safely and efficiently, keeping your downtime to a minimum.

Our tools are used in a variety of tasks to support virtually any MRO application. Look to Power Team for the expertise and technical support to preform a variety of functions to simply your task while enhancing your safety.

Our broad product portfolio of solutions will enable you to:

LIFTING · PULLING · TURNING · CUTTING
LOWERING · PUSHING · BENDING · SPREADING

Power Team offers a range of classes to help you safely operate and maintain your tools.



On-site Safety Training

Workplace safety should be a high priority to assure high-pressure hydraulic tools are used in accordance with recommended safety procedures. Power Team Safety Training Seminars demonstrate the proper methods for operating high-pressure hydraulic tools to avoid equipment damage and lost time accidents. Safety seminars can be conducted at a customer facility, job site or at Power Team headquarters.

Factory Maintenance & Repair Training

Maintaining Power Team products in good operating condition enhances operating efficiency and extends service life. This seminar explains the proper methods for keeping Power Team products operating at peak levels of performance and reliability. Topics include understanding hydraulic circuits, product maintenance, trouble-shooting, and field repairs. Three and five day seminars are structured to meet your product knowledge requirements.

Class schedules are posted on powerteam.com. Contact your district sales manager for more information.

Power Team®

SPXFLOW®

powerteam.com

GLOBAL CUSTOMER SERVICE CENTERS

North America Headquarters
5885 11th Street
Rockford, IL 61109
USA

Customer Service/Order Entry
Tel: +1 800 541 1418
Fax: +1 800 288 7031

Send P.O's to: info@powerteam.com

Technical Services
Tel: +1 800 477 8326
Fax: +1 800 765 8326

European Headquarters
Albert Thijsstraat 12
6471 WX Eygelshoven
The Netherlands
Tel: +31 45 567 8877

infoeurope@powerteam.com

SPX FLOW Technology Singapore Pte Ltd – Service Center
2 Bukit Batok St 23, #02-07,
Bukit Batok Connection,
Singapore 659554
Tel: +65 6264 4366
Email: infoasia@powerteam.com

Survey no. 103, Swagat Industrial Park
Bakrol Bujrang Road, Bakrol,
Ahmedabad, Gujrat - 382430, India

Tel: +91 98388 72666
Email: infoasia@powerteam.com

China Headquarters
7F Treasury Building
1568 Huashan Road
Shanghai, 200052 China
Tel: +86 21 2208 5888
Fax: +86 21 2208 5682

infochina@powerteam.com

Australia Headquarters
SPX FLOW Technology Australia Pty Ltd
211 Atlantic Drive
Keysborough, Victoria, 3173
Australia

www.spxflow.com/au

Visit us at powerteam.com to learn more.

Distributed by:



Power Team®

SPX FLOW, Inc. reserves the right to incorporate our latest design and material changes without notice or obligation.

Design features, materials of construction and dimensional data, as described in this bulletin, are provided for your information only and should not be relied upon unless confirmed in writing. Please contact your local sales representative for product availability in your region. For more information visit www.spxflow.com.

The green "›" and "X" are trademarks of SPX FLOW, Inc.

Bulletin: PT2310A Version: 10/2023

COPYRIGHT © 2023 SPX FLOW INC.